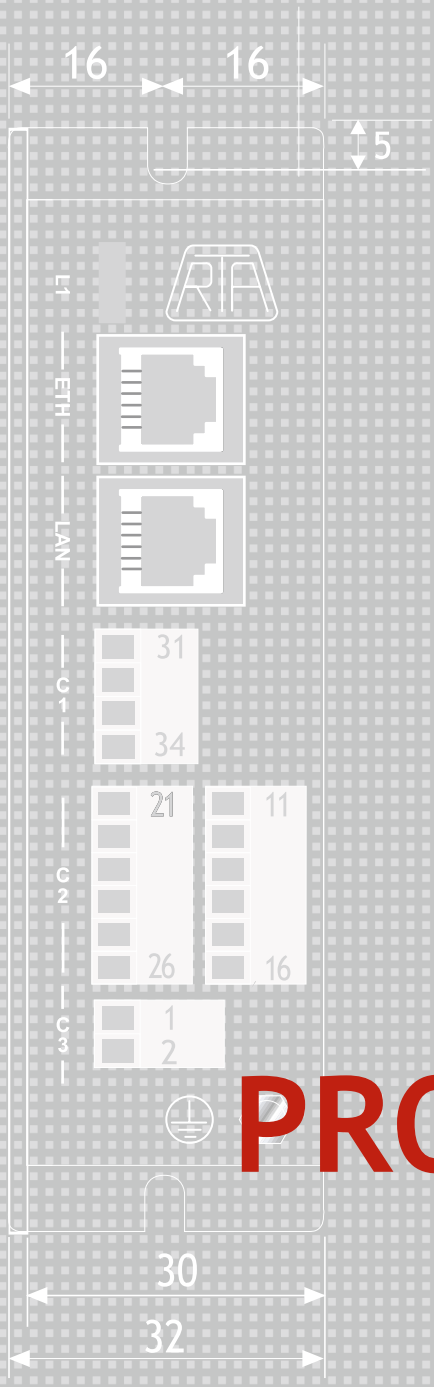


# 2025
# PRODUCT NEWS

Look Ahead!

# TABLE OF CONTENTS


| | | |
|---|---|---|
| | **MOTION CONTROLLERS** | |
| | **EtherCAT PLC** | |
| | MiniMax Series | 4 |
| NEW! | **I/O device** | |
| | IOT 8.8 | 6 |
| | **HMI** | |
| | C7H | 7 |
| | C10S | 7 |
| | TS Series | 8 |
| | | |
| | **SAFETY PLC** | |
| | R1.190.1310.0 | 10 |
| | | |
| | **STEPPING MOTOR DRIVES** | |
| | CSD HT Series | 14 |
| | CSD MT Series | 16 |
| | CSD ET Series | 18 |
| NEW! | X-PLUS AS4 | 20 |
| | X-PLUS MS4 | 22 |
| | X-PLUS RS4 | 24 |
| NEW! | R-MOD ET Series | 26 |
| | HI-MOD ETS Series | 28 |
| | | |
| | ACCESSORIES | |
| | ***Switching Power Supplies*** | |
| | R- UHP 1000-48 | 32 |
| | **STEPPING MOTORS** | |
| | ***Nema 17*** | |
| | RH 1S1H (-RS) | 36 |
| | RH 1S2H (-RS) | 37 |
| | RH 1S3H (-RS) | 38 |
| | RH 1S1H -0XX0 | 39 |
| | RH 1S2H -0XX0 | 40 |
| | RH 1S3H -0XX0 | 41 |
| | SS2422-5041 | 42 |
| | SS2421-5041 | 43 |
| | | |
| | ***Nema 23*** | |
| | RH 2S1M (-RS) | 44 |
| | RH 2S2M (-RS) | 45 |
| | RH 2S1M-0XX0 | 46 |
| | RH 2S2M-0XX0 | 47 |
| | | |
| NEW! | ***Nema 34 with absolute encoder*** | |
| | RM 3T1M-00HT | 48 |
| | RM 3T2M-00HT | 49 |
| | RM 3T3M-00HT | 50 |
| | | |
| | ***Encoder version*** | |
| | EM 6H1M-0XX0 | 51 |
| | | |
| | ACCESSORIES | |
| | ***Front brakes*** | |
| | FB-M12-17-02-00000 | 54 |
| | FB-M12-23-08-00000 | 55 |
| | **SERVO SYSTEMS** | |
| | ***SERVO DRIVES*** | |
| NEW! | GADSA03AH24 | 58 |
| | RS3A05A2HAE | 60 |
| | RS3A10A2HAE | 61 |
| | ***SERVO MOTORS*** | |
| | R2AA13200LXR00M (R2AA13200LCR00M) | 62 |
| | R2CA18350LXR00M (R2AA18350LCR00M) | 63 |
| | R2CA18450HXR00M (R2CA18450HCR00M) | 64 |
| | R2AA18750HCR00M | 65 |
| | R2CA2215KVCH00M | 66 |
| | GAM1AA150F0XRB3 | 67 |
| NEW! | GAM2A4010F0XRK2 (GAM2A4010F0CRK2) | 68 |
| | GAM2A6020F0XRK2 (GAM2A6020F0CRK2) | 69 |
| | GAM2A6040F0XRK2 (GAM2A6040F0CRK2) | 70 |
| | GAM2A8075F0XRK2 (GAM2A8075F0CRK2) | 71 |
| | GAM2A9100H0XRK2 (GAM2A9100H0CRK2) | 72 |
| | GAM2AA10150B0XNB3 (GAM2AA10150B0CNB3) | 73 |
| | GAM2AA150B0XRB3 (GAM2AA150B0CRB3) | 74 |
| | **PLANETARY GEARBOXES** | |
| | SG-P11-120-025-15-SM-286X-00000 | 76 |
| | | |
| | **COOLING FANS** | |
| | 9G1224H102 | 78 |



# MOTION CONTROLLERS

# MiniMax Series EtherCAT PLC

## INTRODUCTION

MiniMax is an EtherCAT PLC designed for easy configuration and programming of stepper and servo drives. It allows to develop EtherCAT automation solutions ranging from basic to medium complexity. With an additional LAN port featuring a Modbus TCP/IP server protocol, it can be easily integrated with HMIs, third party PLCs, Industrial Pcs and other network devices.

## HIGHLIGHTS

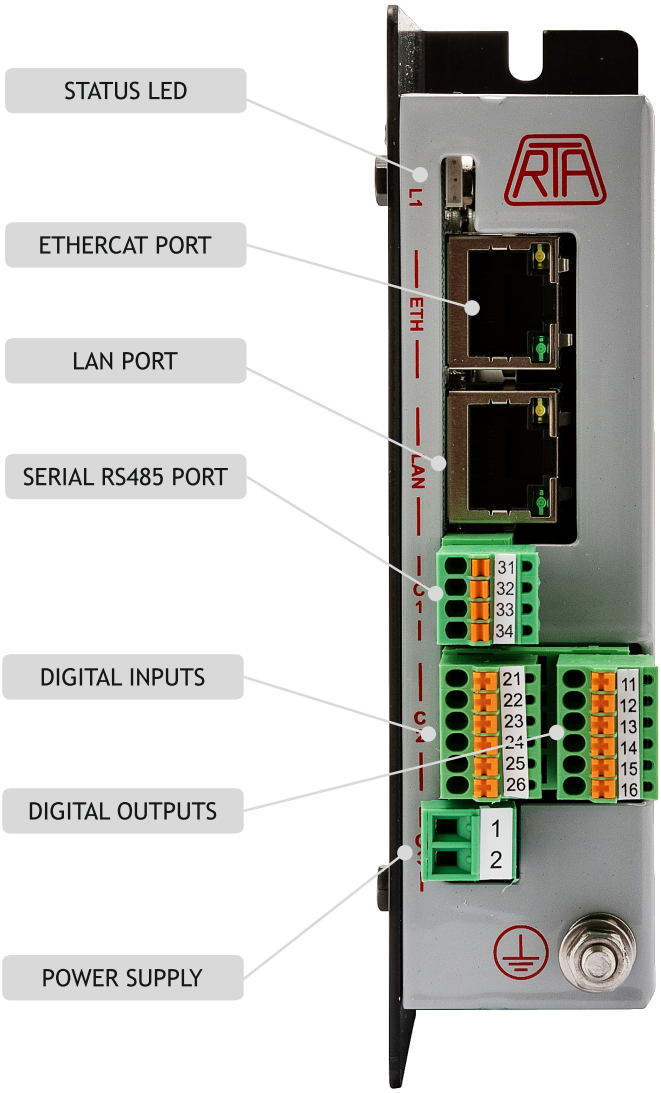


- RTA Studio: unique software environment for configuration and debugging
- Smart Structured Text programming language with built-in function libraries
- Full RTA and SANYO DENKI EtherCAT drives compatibility
- Easy integration with other automation systems by Modbus TCP/IP, UDP and Modbus RTU
- Up to 20 realtime parallel processes
- Compact Size: 32x130x106 mm
- Advanced Axes Motion Interpolation
- 5 Digital Inputs + 5 Digital Outputs
- **RTA Wiki** platform available for further technical insights

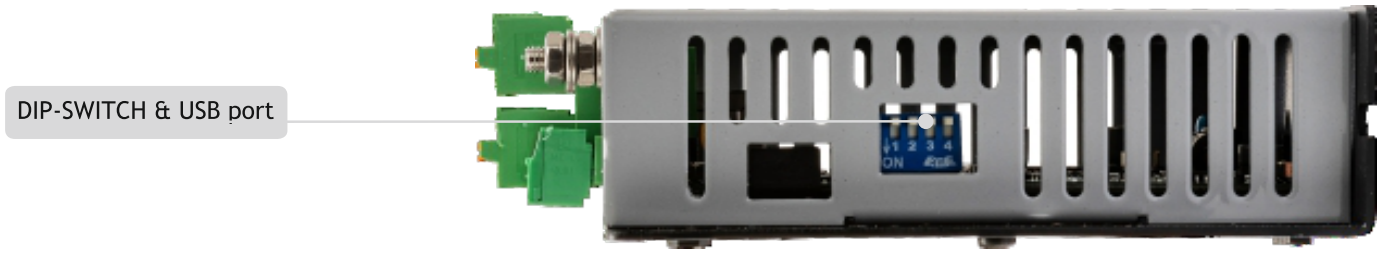

# MiniMax versions comparison

| MiniMax A1 | MiniMax R2 |
|---|---|
| 8 basic axes* | 20 basic axes |
| 2 advanced axes▲ | 20 advanced axes |

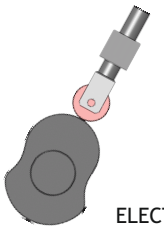

ELECTRICAL CAMS MANAGEMENT

* Basic axes: point to point movements and homing (CSP mode of operation)
▲ Advanced axes: advanced axes interpolation, mechanical cam, gears and links

# MiniMax Development Environment

## Complete integrated environment for Microsoft Windows

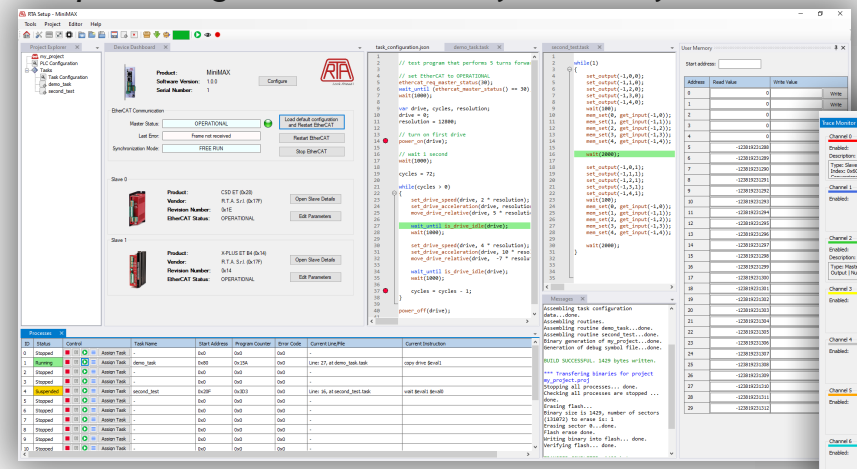

## Trace monitoring of automation process parameters

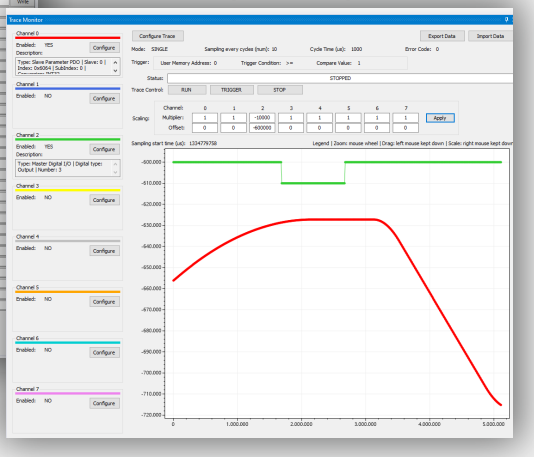

## Easy programming language and debugging tools

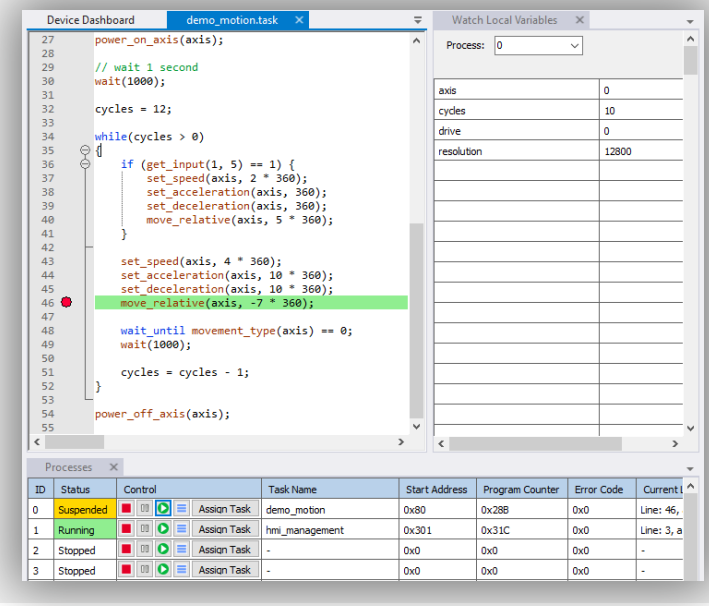


## Quick Axis settings and testing setup

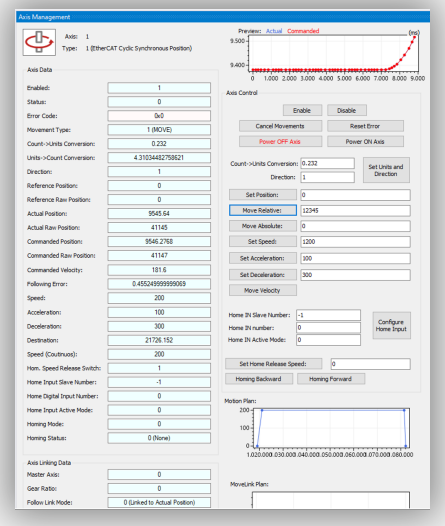

MiniMax Series

Download the MiniMax Series full Datasheet

# *IOT ET D8.8 Module*

The IOT module manages digital inputs/outputs, with integrated LED indication to display its status.

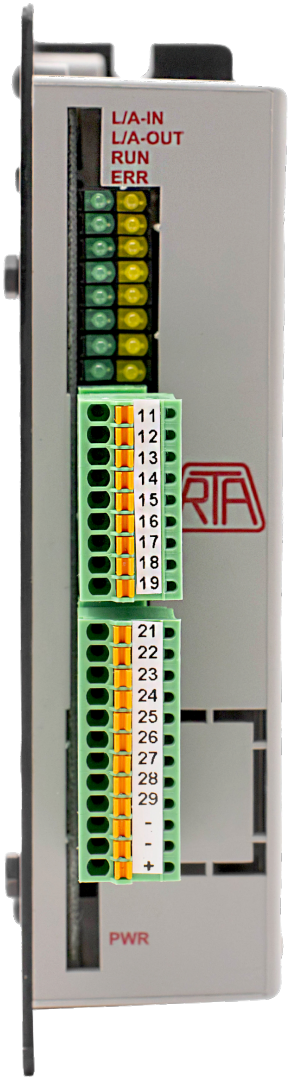


## HIGHLIGHTS

- It receives digital logic commands, detect digital inputs status and controls digital outputs.
- EtherCAT interface
- RTA's EtherCAT PLC *MiniMax* expansion or stand-alone unit
- 8 digital input
- 8 digital bi-directional output
- Power supply: 24 VDC
- Protections Over-Voltage and Shortcircuit for outputs

## R.T.A. *MiniMax* SYSTEM EXAMPLE

UP TO 20 STEPPER & SERVO AXES

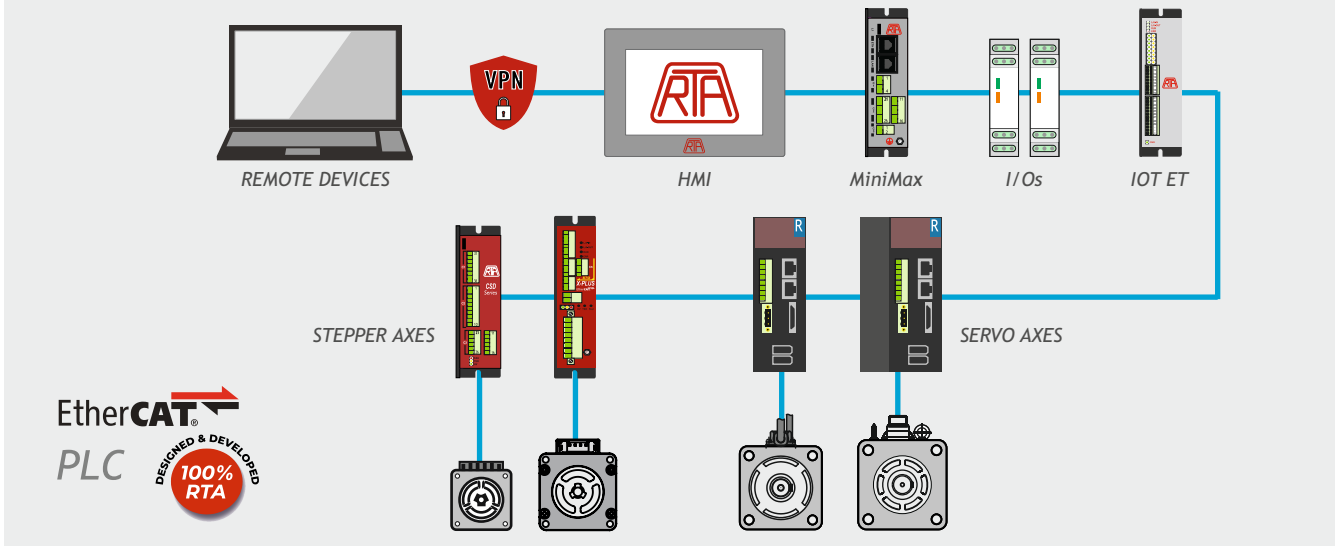

# HMI Touch Screen - TS series

NEW Tech Specs

## MAIN FEATURES

- Four models in two sizes
- Free developer tools
- Optional remote control (VPN)
- Easy integration with R.T.A. products
- R.T.A. support team

| | | | | | |
|---|---|---|---|---|---|
| | |  | NEW MODEL  | NEW MODEL  | NEW MODEL  |
| | MODEL | TS-07-IP-B-08072 | TS-07-CMT-A-02078X | TS-07-CMT-A-03072XH2 | TS-10-CMT-A-03092X |
| SOFTWARE FEATURES | *BASE FUNCTIONS | ■ | ■ | ■ | ■ |
| | **ADVANCED FUNCTIONS | | ■ | ■ | ■ |
| | PLC TAG EMBEDDED IN PROJECT | ■ | ■ | ■ | ■ |
| | OPC SERVER | | | ■ | ■ |
| | EXTERNAL DATABASE | | | ■ | ■ |
| | SUPPORT | | | | |
| REMOTE CONTROL | EASY ACCESS 2.0 (CRZACEA020) | / | Optional | Optional | Optional |
| I/O PORT | ETHERNET | 10/100 Base-T x 1 | 10/100 Base-T x 2 | 10/100 Base-T x 2 | 10/100 Base-T x 1<br>10/100/1000 Base-T x 1 |

*Base functions: Picutres/ Sharpe Library embedded in project, Enhanced Security Mode, VNC Server, Circular Trend Display, Combo Button, Operation Log, OPC UA Client, Picture Viewer, Recipe Database / Reciper View

**Advanced functions: e-Mail, Media Player, MQTT (Publisher / Subscriber), USB Camera, IP Camera, VNC Viewer,

## HOW THE REMOTE CONTROL WORKS

EasyAccess 2.0 enables the operator to easily connect and monitor the remote HMI from anywhere in the world, through a protected remote VPN connection.

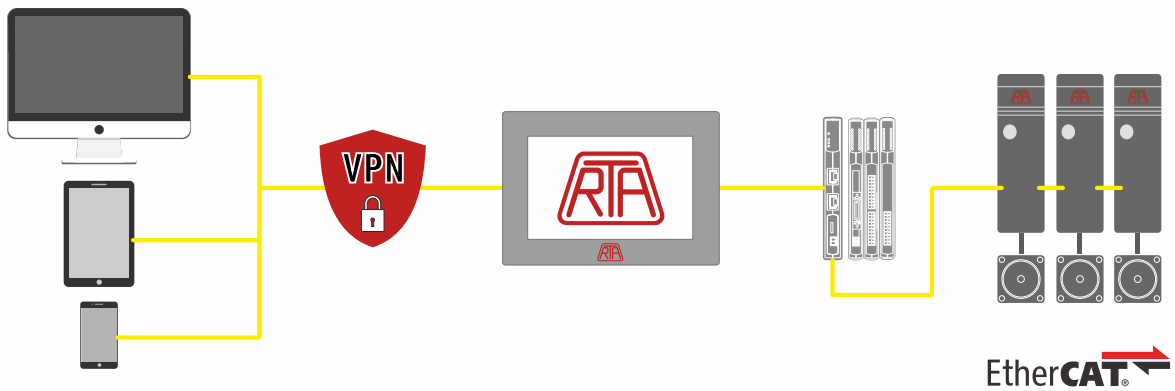

# HMI *Touch Screen C7H - C10S*

## MAIN FEATURES

- 2 serial ports, 2 USB ports, SD card
- Compact size for easy installation
- R.T.A. support team

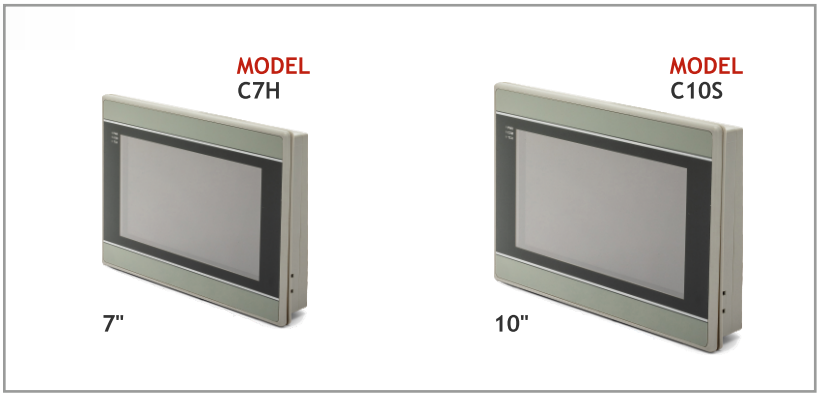


## TECHNICAL SPECIFICATIONS

| MODEL | | C7H | C10S |
|---|---|---|---|
| DISPLAY | DISPLAY | 7" | 10.1" |
| | RESOLUTION | 1024x600 pixels | 1024x600 pixels |
| MEMORY | FLASH | 4 Gb | |
| | RAM | 512 Mb | |
| DIMENSIONS | DIMENSION | 200x146x37 mm | 270x212x35 mm |
| | WEIGHT | 0.8 Kg | 1.3 Kg |
| POWER | POWER CONSUMPTION | 24±20% VDC | |
| | INPUT POWER | 7 W | 10 W |

## MECHANICAL DIMENSIONS (mm)

Model C7H

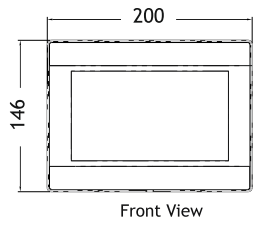

Front View

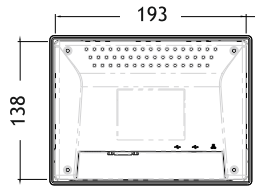

Rear View



Bottom View

Model C10S

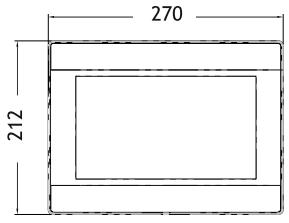

Front View

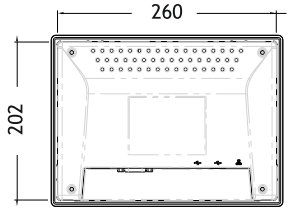

Rear View

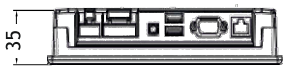

Bottom View

## ADVANCED SPECIFICATIONS

| MODEL | | TS-07-IP-B-08072 | TS-07-CMT-A-02078X | TS-07-CMT-A-03072XH2 | TS-10-CMT-A-03092X |
|---|---|---|---|---|---|
| DISPLAY | DISPLAY | 7" TFT | 7" TFT | 7" TFT | 9.7" TFT |
| | RESOLUTION | 800x480 | 800x480 | 1024x600 | 1024x768 |
| | BACKLIGHT LIFE TIME | >30,000 hrs. | >30,000 hrs. | >25,000 hrs. | >30,000 hrs. |
| MEMORY | FLASH | 256 Mb | 4 Gb | 4 Gb | 4 Gb |
| | RAM | 128 Mb | 1 Gb | 1 Gb | 1 Gb |
| PROCESSOR | | Dual-core RISC | Quadcore RISC | Quadcore RISC | Quadcore RISC |
| I/O PORT | USB HOST | USB 2.0 x 1 | USB 2.0 x 1 | USB 2.0 x 1 | USB 2.0 x 1 |
| | COM PORT | COM1 RS-232, COM2 RS-485 2W/4W | COM2 RS-485 2W/4W, COM3 RS-485 2W | COM2 RS-485 2W/4W, COM3 RS-485 2W CAN Bus | COM2 RS-485 2W/4W, COM3 RS-485 2W CAN Bus |
| | | / | COM1 RS-232 4W, COM3 RS-232 2W | COM1 RS-232 4W, COM3 RS-232 2W | COM1 RS-232 4W, COM3 RS-232 2W |
| RTC | | Built-in | Built-in | Built-in | Built-in |
| CERTIFICATE | | CE | CE/UL | CE/UL | CE/UL |
| DIMENSIONS | DIMENSIONS WxHxD | 200.4 x 146.5 x 34 mm | 200.3 x 146.3 x 35 mm | 200.3 x 146.3 x 35 mm | 260.6 x 203.1 x 44.5 mm |
| | PANEL CUTOUT | 192 x 138 mm | 192 x 138 mm | 192 x 138 mm | 250 x 192 mm |
| ENVIROMENT | PROTECTION STRUCTURE | NEMA4 / IP65 Compliant Front Panel | UL Type 4X (indoor use only)/ NEMA4/ IP66 Compliant Front Panel | UL Type 4X (indoor use only)/ NEMA4/ IP66 Compliant Front Panel | UL Type 4X (indoor use only)/ NEMA4/ IP66 Compliant Front Panel |
| POWER | INPUT POWER | 24 ± 20% VDC | 24 ± 20% VDC | 24 ± 20% VDC | 24 ± 20% VDC |
| | POWER CONSUMPTION | 450 mA at 24VDC | 820 mA at 24VDC | 850 mA at 24VDC | 1 A at 24 VDC |
| | POWER ISOLATION | Built-in | Built-in | Built-in | Built-in |

## MECHANICAL DIMENSIONS (mm)

### Model TS-07-IP-B-08072

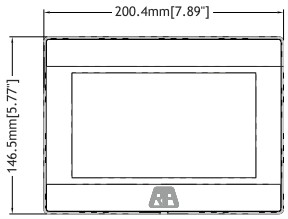

Front View

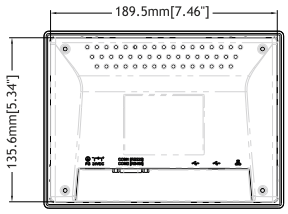

Rear View

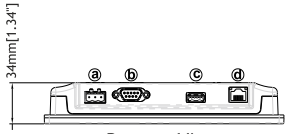

Bottom View

### Model TS-07-CMT-A-03072XH2<br>TS-07-CMT-A-02078X

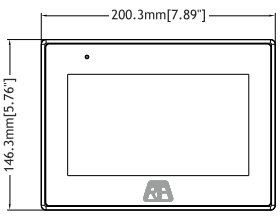

Front View

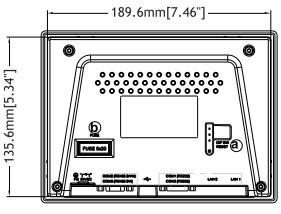

Rear View

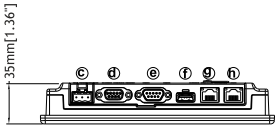

Bottom View

### Model TS-10-CMT-A-03092X

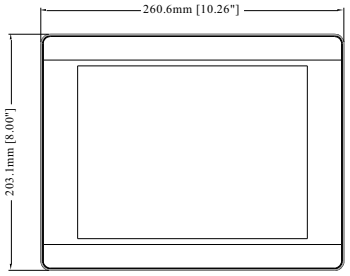

Front View

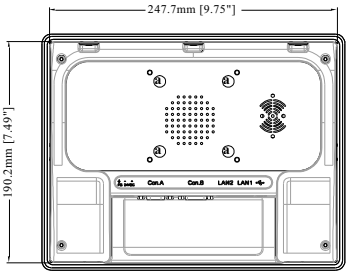

Rear View

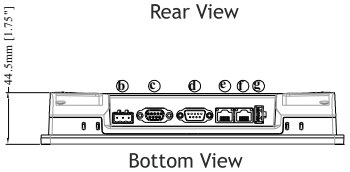

Bottom View

# SAFETY PLC *Wieland R1.190.1310.0*

## INTRODUCTION

The samosPRO Compact module is suitable for monitoring safety sensors, emergency STOP buttons, safety door switches and door locks, safety light curtains and laser scanners.




## HIGHLIGHTS

- 16 safe input, 4 safe output
- 4 configurable I/Os
- Mini-USB and Ethernet ports
- Modbus TCP/IP comunication
- Easy integration in the R.T.A. system

## R.T.A. SAFETY PLC SYSTEM

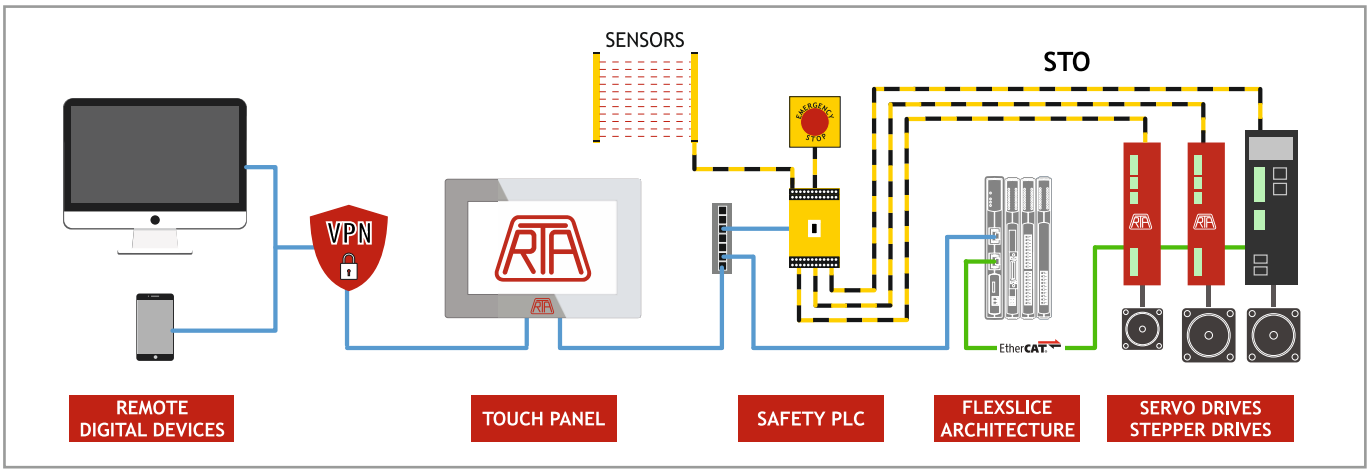


## MAIN FEATURES

| GENERAL FEATURES | |
|---|---|
| TYPE OF PROTECTION (ACCORDING TO DIN 60529) | IP20 |
| NORMATIVE | EN 62508, EN 62061, EN ISO 13849-1, EN 50156, EN 81-1 |
| CERTIFICATIONS | TUV, UL |

| SAFETY PARAMETERS | |
|---|---|
| CATEGORY (ISO 13849-1) | 4 |
| PL (ISO 13849-1) | Level e |
| $SIL_{CL}$ (IEC 62061) | 3 |
| HFT | 1 |
| $T_M$ | 20 a |

## TECHNICAL SPECIFICATIONS

| POWER CIRCUIT | |
|---|---|
| OPERATING VOLTAGE RANGE | 24 VDC -30%/+25% |
| NOMINAL POWER | 3,5 W (Logic absortion) |

| INPUT CIRCUIT | |
|---|---|
| DIGITAL INPUTS | 16 + 4 Configurable |
| INPUT VOLTAGE RANGE | 15 VDC up to 30 VDC |
| NOMINAL CURRENT | 2 mA |

| OUTPUT CIRCUIT | |
|---|---|
| DIGITAL OUTPUTS | 4 + 4 Configurable |
| OUTPUT VOLTAGE RANGE | 24 VDC |
| OUTPUT CURRENT $I_n$ PER OUTPUT | 4 A ($I_{sum}$ 16 A) |

| INTERFACE CIRCUIT | |
|---|---|
| ETHERNET INDUSTRIAL PROTOCOLS | Modbus TCP/IP |
| PROGRAM MEMORY | Esternal (Mandatory pairing with SD WIELAND R1.190.1000.00) |

## SAFETY FUNCTIONS

- Contactless operating selection function
- Control function of external contactors
- Contemporaneity button function
- Operation mode selection function
- Block restart funtion
- Bimanual function
- Safety function
- Access control function
- ON/OFF Delay timer

## MECHANICAL DIMENSIONS (mm)

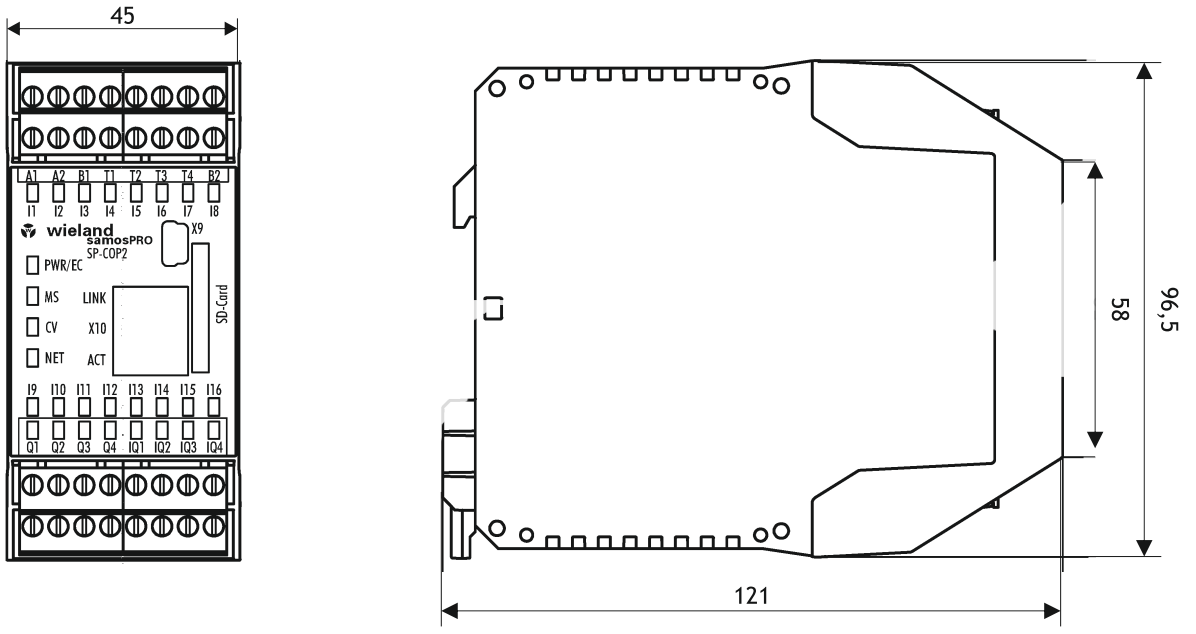



# STEPPING MOTOR DRIVES

# CSD HT Series Drives

EtherNet/IP™

## INTRODUCTION

- New series of stepping motor drives with EtherNet interface, now available with a 3rd generation firmware release and extended current and voltage range.
- Drives optimized for coupling with SANYO DENKI stepping motors, fitted with encoder, but also able to manage third party motors.
- Also available with other interfaces:

EtherCAT® Modbus TCP/IP

EXTENDED VOLTAGE & CURRENT RANGE

3rd FIRMWARE GENERATION




## MAIN FEATURES

- Modes of operation: Profile Position, Profile Velocity and Homing.
- Wide range of motor phase current setting and motor current overboost:
  - 120% for CSD HT S4 models
  - 140% for CSD HT S8 models.

  CURRENT OVERBOOST +140%
- Control of different motors sizes:
  - Up to Nema 24 for CSD HT S4 models
  - Up to Nema 34 for CSD HT S8 models. NEW!
- Different variety of HOMING operation modes.
- Encoder feedback and support of different resolution.
- Touch Probe function available.
- Limit switches management.
- Auto-sync function available featuring a closed loop positioning.
- 2 + 3 I/Os.
- UL/ CSA.

Please refer to download.rta.it for technical specifications

c UL us

AUTO SYNC FUNCTION

## STO FUNCTION FEATURES

- Safe Torque Off (STO) function - SIL3
- Error Detection Monitor

SIL3 SAFE TORQUE OFF (STO)

| Series | Model | $V_{DC}$ range | I nom. | I boost | Digital In/Out | Dimensions |
|---|---|---|---|---|---|---|
| | | (Volt) | (Amp) | (Amp) | | (mm) |
| CSD HT | S8 STO | 24 to 85 | 6.0 | 8.4 | 2/3 | 130x106x32 |
| CSD HT | S4 STO | 24 to 48 | 4.0 | 4.8 | 2/3 | 130x106x32 |

CURRENT OVERBOOST +140%

## TECHNICAL FEATURES

- Range of operating voltage:
  - 24-48 VDC for CSD HT S4 models
  - 24-85 VDC for CSD HT S8 models.
- Protections:
  -Protection against under-voltage and over-voltage
  -Protection against a short-circuit at motor outputs
  -Overtemperature protection.
- Electronic damping facility for further acoustic noise and mechanic vibrations reduction.
- Available in plastic boxed version with plug-in connectors.
- Maximum compactness.
- Optoinsulated auxiliary and programmable inputs and outputs.
- Warranty: 24 months.




- A kit for mounting on a DIN rail is available as optional. Code: KNDCGD



## POWER AND LOGIC CONNECTIONS

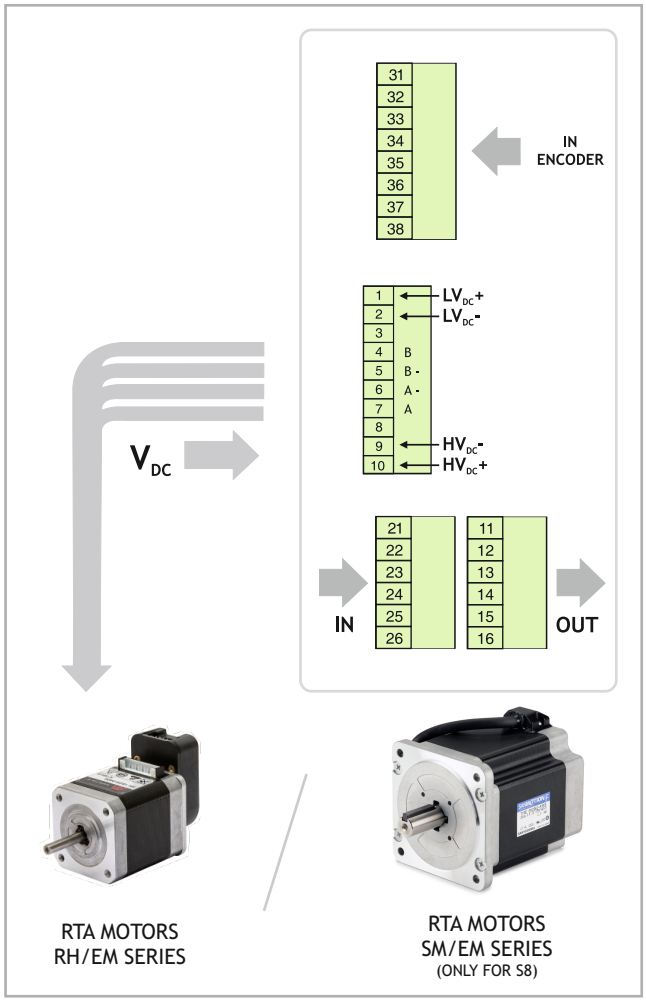


EtherNet/IP™

## MECHANICAL DIMENSIONS

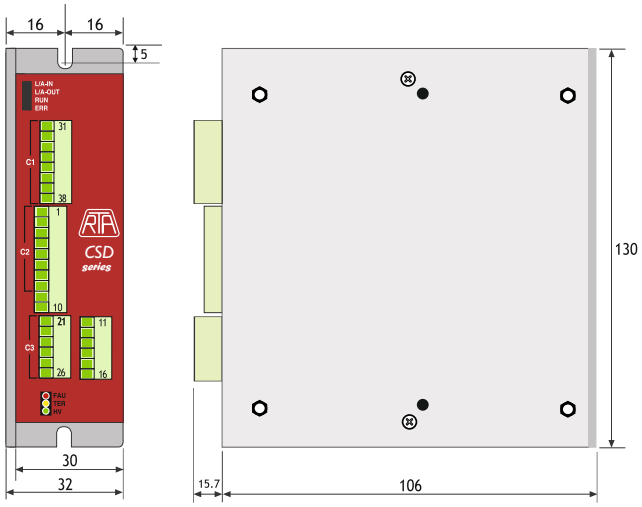


CSD HT
HIGH SIDE VIEW

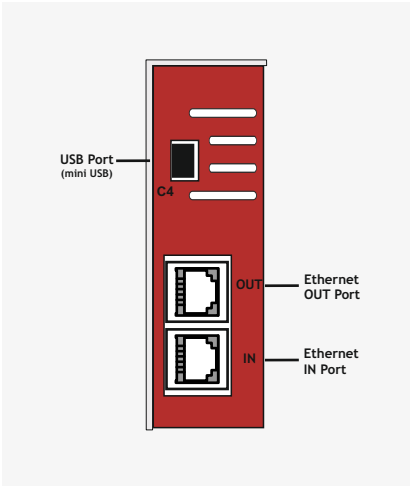


Dimensions in millimeters - Not in scale.

# CSD MT Series Drives

Modbus TCP/IP

## INTRODUCTION

- New series of stepping motor drives with Modbus TCP/IP interface, now available with a 3rd generation firmware release and extended current and voltage range.
- Drives optimized for coupling with SANYO DENKI stepping motors, fitted with encoder, but also able to manage third party motors.
- Also available with other interfaces:

EtherNet/IP EtherCAT

EXTENDED VOLTAGE & CURRENT RANGE

3rd FIRMWARE GENERATION




Please refer to download.rta.it for technical specifications

c UL us

AUTO SYNC FUNCTION

## MAIN FEATURES

- Modes of operation: Profile Position, Profile Velocity and Homing.
- Wide range of motor phase current setting and motor current overboost:
  - 120% for CSD MT 94/S4 models
  - 140% for CSD MT S8 models.

  CURRENT OVERBOOST +140%
- Control of different motors sizes:
  - Up to Nema 24 for CSD MT 94/S4 models
  - Up to Nema 34 for CSD MT S8 models. NEW!
- Different variety of HOMING operation modes.
- Encoder feedback and support of different resolution.
- Touch Probe function available.
- Limit switches management.
- Auto-sync function available featuring a closed loop positioning.
- 5 + 5 I/Os (MT 94) and 2 + 3 I/Os (MT S4/S8).
- UL/ CSA.

## STO FUNCTION FEATURES

- Safe Torque Off (STO) function - SIL3
- Error Detection Monitor

SIL3 SAFE TORQUE OFF (STO)

| Series | Model | $V_{DC}$ range | I nom. | I boost | Digital In/Out | STO | Dimensions |
|---|---|---|---|---|---|---|---|
| | | (Volt) | (Amp) | (Amp) | | | (mm) |
| CSD MT | S8 STO | 24 to 85 | 6.0 | 8.4 | 2/3 | Yes | 130x106x32 |
| CSD MT | S4 STO | 24 to 48 | 4.0 | 4.8 | 2/3 | Yes | 130x106x32 |
| CSD MT | 94 | 24 to 48 | 4.0 | 4.8 | 5/5 | No | 130x106x32 |

CURRENT OVERBOOST +140%

## TECHNICAL FEATURES

- Range of operating voltage:
  - 24-48 VDC for CSD MT 94/S4 models
  - 24-85 VDC for CSD MT S8 models.
- Protections:
  -Protection against under-voltage and over-voltage
  -Protection against a short-circuit at motor outputs
  -Overtemperature protection.
- Electronic damping facility for further acoustic noise and mechanic vibrations reduction.
- Available in plastic boxed version with plug-in connectors.
- Maximum compactness.
- Optoinsulated auxiliary and programmable inputs and outputs.
- Warranty: 24 months.




- A kit for mounting on a DIN rail is available as optional. Code: KNDCGD



## POWER AND LOGIC CONNECTIONS

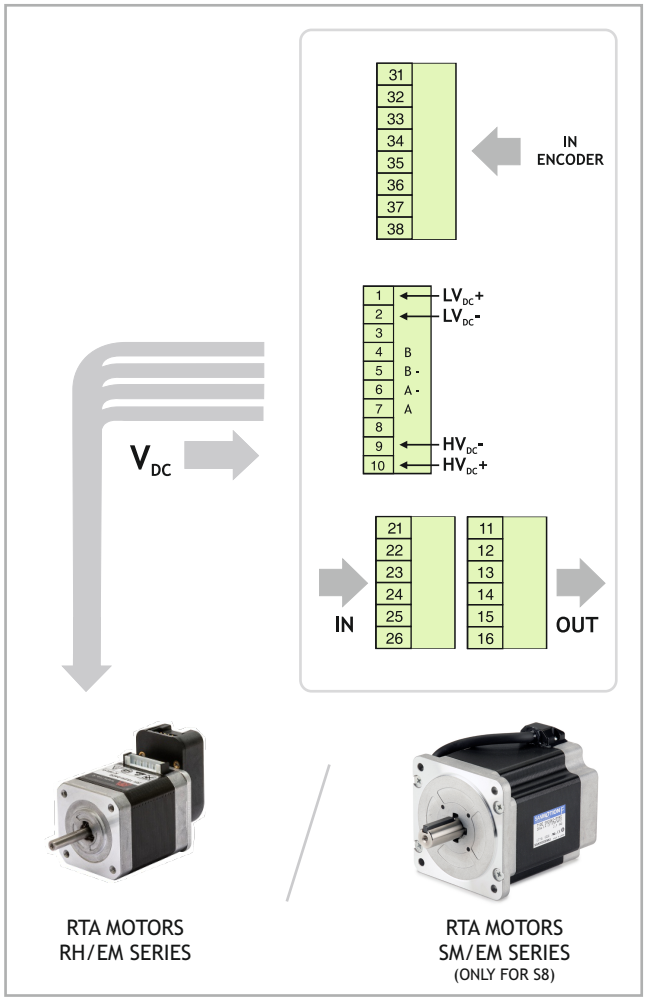


Modbus TCP/IP

## MECHANICAL DIMENSIONS

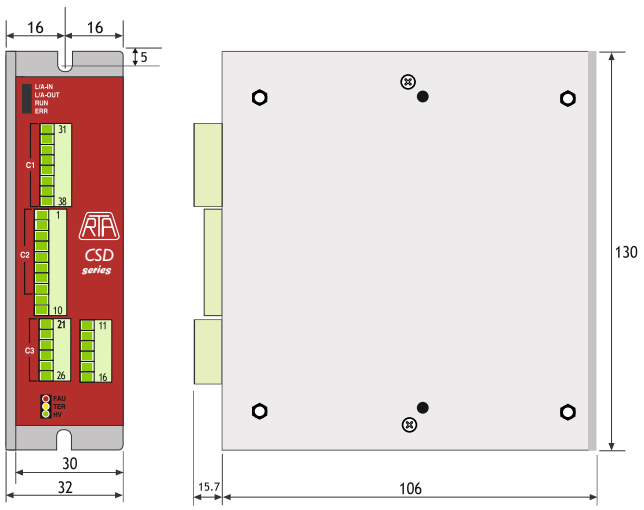


CSD MT
HIGH SIDE VIEW

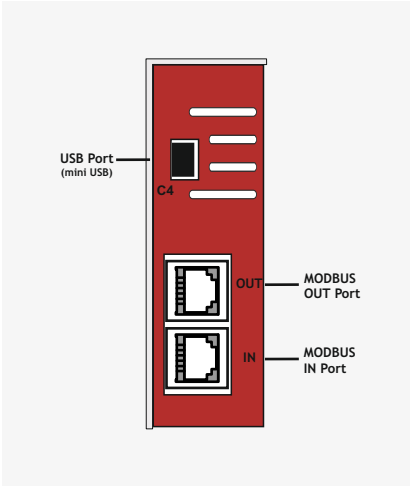


Dimensions in millimeters - Not in scale.

# CSD ET Series Drives

EtherCAT®

## INTRODUCTION

- New series of stepping motor drives with EtherCAT interface, now available with a 3rd generation firmware release and extended current and voltage range.
- Drives optimized for coupling with SANYO DENKI stepping motors, fitted with encoder, but also able to manage third party motors.
- Also available with other interfaces:

EtherNet/IP Modbus TCP/IP

EXTENDED VOLTAGE & CURRENT RANGE

3rd FIRMWARE GENERATION




## MAIN FEATURES

- Modes of operation: Profile Position, Profile Velocity, Homing, CSP and CSV.
- Wide range of motor phase current setting and motor current overboost:
  - 120% for CSD ET 94/S4 models
  - 140% for CSD ET S8 models.

CURRENT OVERBOOST +140%

- Control of different motors sizes:
  - Up to Nema 24 for CSD ET 94/S4 models
  - Up to Nema 34 for CSD ET S8 models. NEW!
- Different variety of HOMING operation modes.
- Encoder feedback and support of different resolution.
- Touch Probe function available.
- Limit switches management.
- Auto-sync function available featuring a closed loop positioning.
- 5 + 5 I/Os (ET 94) and 2 + 3 I/Os (ET S4/S8).
- UL/ CSA.

Please refer to download.rta.it for technical specifications

c UL us

AUTO SYNC FUNCTION

## STO FUNCTION FEATURES

- Safe Torque Off (STO) function - SIL3
- Error Detection Monitor

SIL3 SAFE TORQUE OFF (STO)

| Series | Model | $V_{DC}$ range | I nom. | I boost | Digital In/Out | STO | Dimensions |
|---|---|---|---|---|---|---|---|
| | | (Volt) | (Amp) | (Amp) | | | (mm) |
| CSD ET | S8 STO | 24 to 85 | 6.0 | 8.4 | 2/3 | Yes | 130x106x32 |
| CSD ET | S4 STO | 24 to 48 | 4.0 | 4.8 | 2/3 | Yes | 130x106x32 |
| CSD ET | 94 | 24 to 48 | 4.0 | 4.8 | 5/5 | No | 130x106x32 |

CURRENT OVERBOOST +140%

## TECHNICAL FEATURES

- Range of operating voltage:
  - 24-48 VDC for CSD ET 94/S4 models
  - 24-85 VDC for CSD ET S8 models.
- Protections:
  -Protection against under-voltage and over-voltage
  -Protection against a short-circuit at motor outputs
  -Overtemperature protection.
- Electronic damping facility for further acoustic noise and mechanic vibrations reduction.
- Available in plastic boxed version with plug-in connectors.
- Maximum compactness.
- Optoinsulated auxiliary and programmable inputs and outputs.
- Warranty: 24 months.




- A kit for mounting on a DIN rail is available as optional. Code: KNDCGD



## POWER AND LOGIC CONNECTIONS

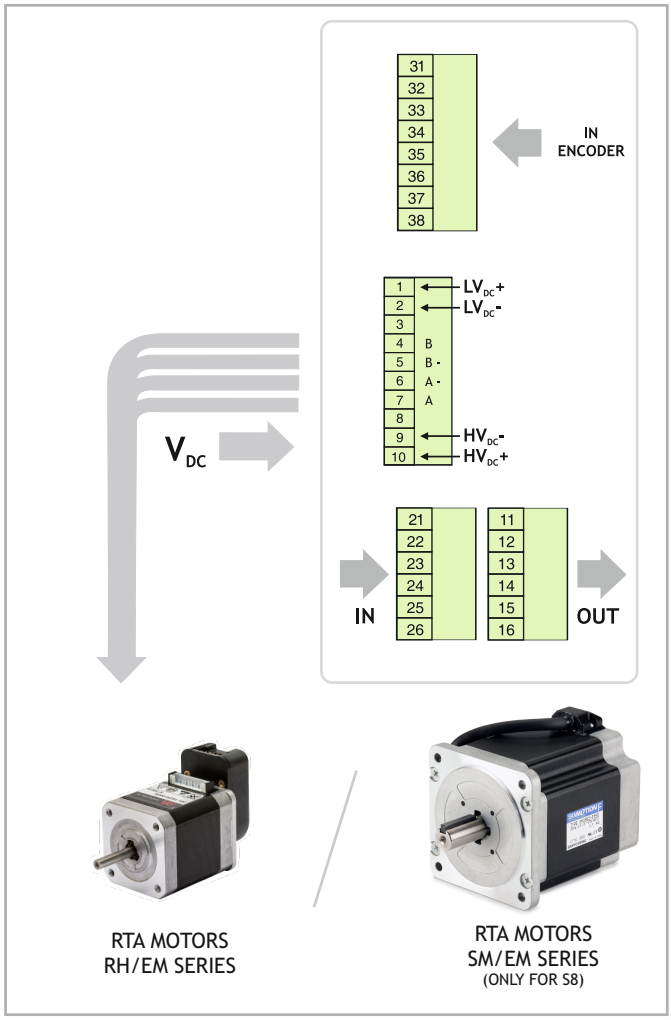


EtherCAT®

## MECHANICAL DIMENSIONS

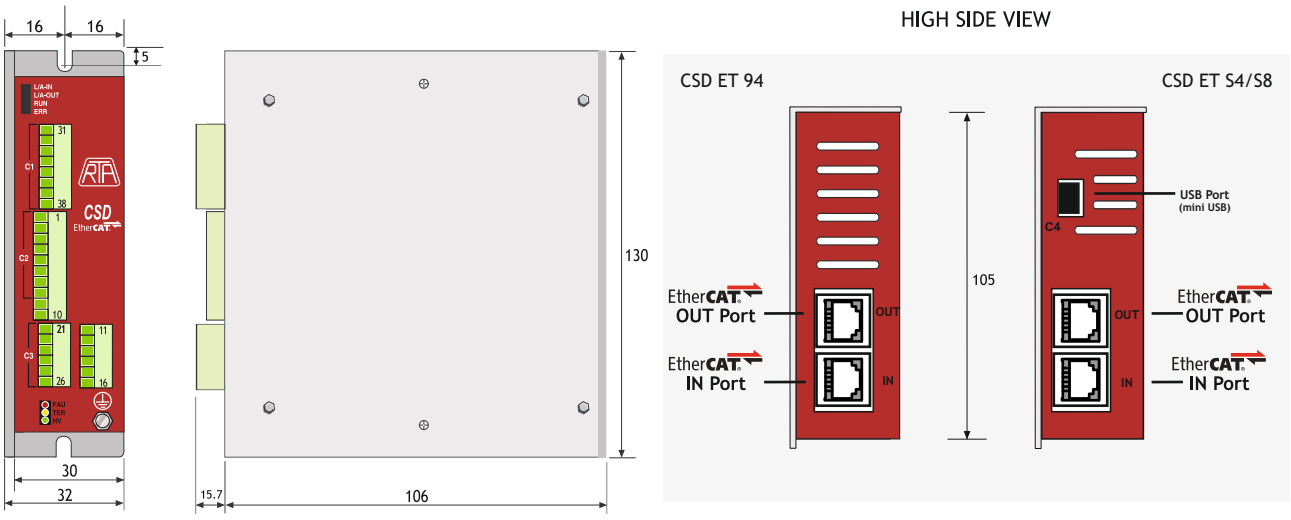


Dimensions in millimeters - Not in scale.

# X-PLUS AS4 Series Drives

## INTRODUCTION

- X-Plus AS4 is a new model of RTA flagship high-power stepping motor drive with STEP&DIR, Analog Input (± 10 Volt) and Modbus RTU RS-485 interface.
- Embedded Auto-Sync and Auto-Feed functions with absolute encoder, featuring a closed loop positioning and motor performance optimization.

## ABSOLUTE ENCODER MANAGEMENT

- The X-PLUS AS4 drive supports high-precision positioning with battery-less absolute encoders, enabling advanced motion control

BATTERY-LESS ABSOLUTE ENCODER

## AUTO-FEED

AUTO-FEED is a closed loop function with:

- Very simple tuning
- Lower power consumption and heating

## MODBUS RTU MAIN FUNCTIONS

- Homing, Position and Velocity mode
- Registers for diagnostics

## HIGHLIGHTS

- 3 Current Control modes available: Open Loop, Auto-Sync and Auto-Feed.
- Configuration settings, diagnostics and setup via RTA STUDIO for Windows®.
- INPUT and OUTPUT configurable.
- Integrated system for back EMF energy dissipation with optional external resistor.
- Safe Torque Off (STO) function - SIL3-PIe Error Detection Monitor (EDM) output

Modbus RTU · Step-Dir EVOLUTION · ANALOG IN ±10 V




SIL3 SAFE TORQUE OFF (STO) · AUTO FEED FUNCTION · AUTO SYNC FUNCTION

### Motor coupling

- RM 3T1M-00HT
- RM 3T2M-00HT
- RM 3T3M-00HT

BATTERY-LESS ABSOLUTE ENCODER

## ONE OF THE MOST COMPACT DRIVES WITH POWER INPUT DIRECTLY FROM THE MAIN AC SUPPLY (110 - 230 VAC)

| Series | Model | $V_{AC}$ range | I nom. | I boost | Dimensions |
|---|---|---|---|---|---|
| | | (Volt) | (Amp) | (Amp) | (mm) |
| X-PLUS | AS4 | 110 to 230 +/- 15% | 4.8 | 6.0 | 169x129x46 |

## TECHNICAL FEATURES

- Range of operating nominal voltage: 110-230 $V_{AC}$.
- Up to 6.0 Amps motor current setting.
- RS-485 baud rate up to 256000.
- Microstepping: 2048, 4096, 16384 and 65536 steps/revolutions.
- Protections:
  - -Protection against under-voltage and over-voltage
  - -Protection against a short-circuit at motor outputs
  - -Overtemperature protection with thermal sensor
  - -Open motor/encoder phase.
- Automatic current reduction at motor standstill.
- Electronic damping facility for further acoustic noise and mechanic vibrations reduction.
- Easy wiring with plug-in connectors. Maximum compactness.
- Optoinsulated digital I/O to ensure best EM noise immunity.
- Coupling with stepping motors rated for high insulation is mandatory.
  RTA codes: RM 3TxM-00HT x=1, 2, 3
- Warranty: 24 months.

## POWER AND LOGIC CONNECTIONS

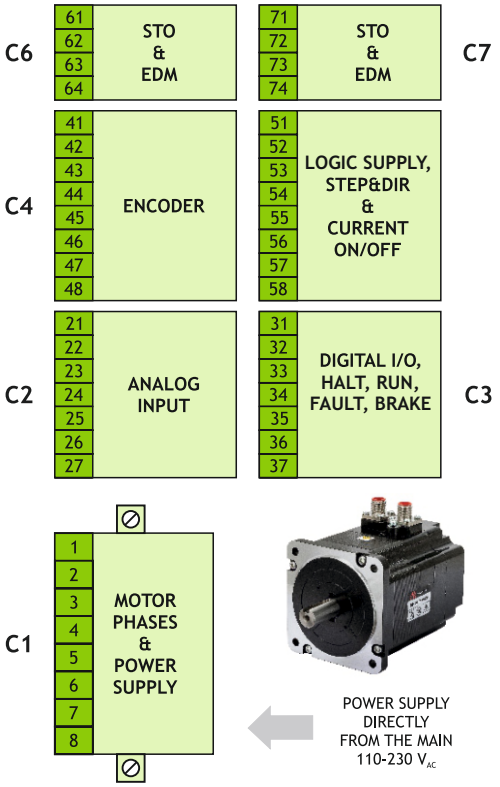











## MECHANICAL DIMENSIONS

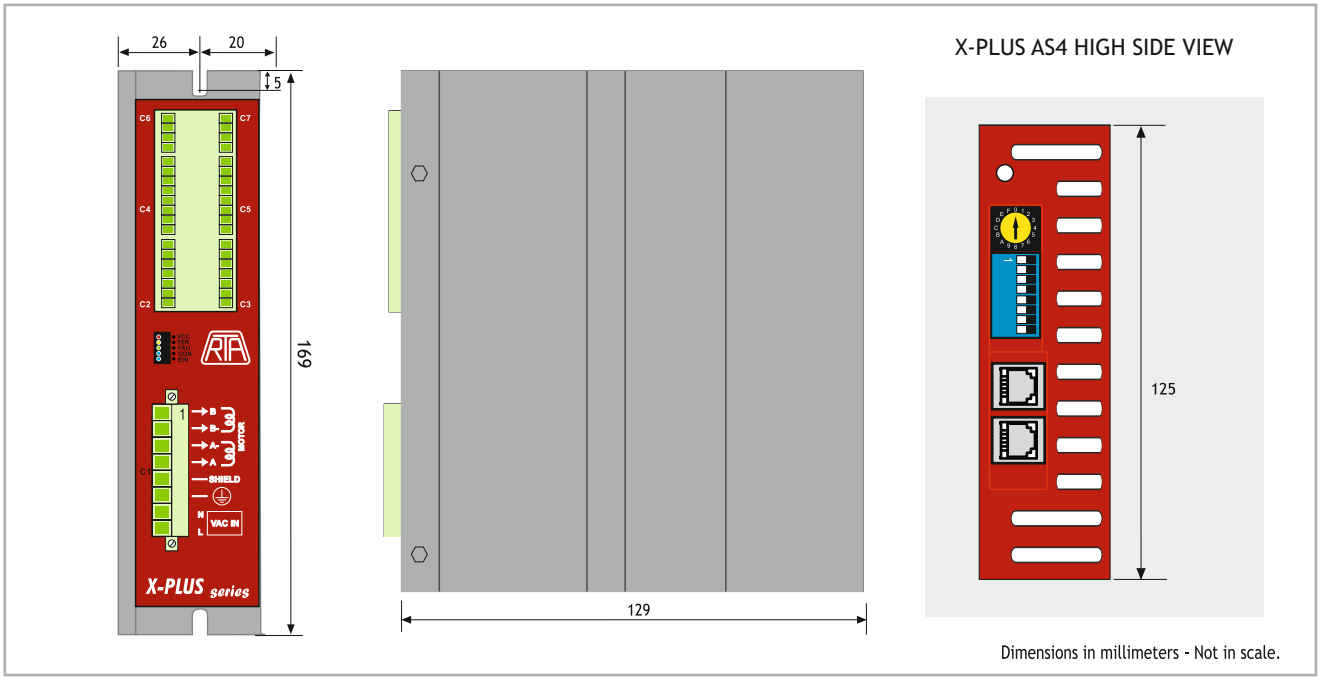

# X-PLUS MS4 Series Drives

## INTRODUCTION

- X-Plus MS4 is a new model of RTA flagship high-power stepping motor drive with STEP&DIR, Analog Input and Modbus RTU RS-485 interface.
- Embedded Auto-Sync and Auto-Feed functions with encoder, featuring a closed loop positioning and motor performance optimization.

Step-Dir EVOLUTION + ANALOG IN ±10 V + Modbus RTU

### AUTO-FEED

AUTO-FEED is a closed loop function with:

- Very simple tuning
- Lower power consumption and heating

### MODBUS RTU MAIN FUNCTIONS

- Homing, Position and Velocity mode
- Registers for diagnostics

Modbus RTU

## HIGHLIGHTS

- 3 Current Control modes available: Open Loop, Auto-Sync and Auto-Feed
- Configuration settings, diagnostics and setup via RTA STUDIO for Windows®.
- INPUT and OUTPUT configurable.
- Extended interfaces: STEP&DIR, Analog Input velocity setpoint (± 10 Volt) and Modbus RTU.
- Integrated system for back EMF energy dissipation with optional external resistor.
- Zero index, Proximity Switch and Hard Stop searching function.
- Replied encoder signal output.




AUTO FEED FUNCTION

AUTO SYNC FUNCTION

## STO FUNCTION FEATURES

- Safe Torque Off (STO) function - SIL3-PIe
- Error Detection Monitor (EDM) output

SIL3 SAFE TORQUE OFF (STO)

## ONE OF THE MOST COMPACT DRIVES WITH POWER INPUT DIRECTLY FROM THE MAIN AC SUPPLY (110 - 230 VAC)

| Series | Model | $V_{AC}$ range | I nom. | I boost | Dimensions |
|---|---|---|---|---|---|
| | | (Volt) | (Amp) | (Amp) | (mm) |
| X-PLUS | MS4 | 110 to 230 +/- 15% | 4.8 | 6.0 | 169x129x46 |

## TECHNICAL FEATURES

- Range of operating nominal voltage: 110-230 $V_{AC}$.
- Up to 6.0 Amps motor current setting.
- RS-485 baud rate up to 256000.
- Microstepping: 400, 800, 1600, 3200, 6400 and 12800 steps/revolutions.
- Various encoder resolution available.
- Protections:
  - -Protection against under-voltage and over-voltage
  - -Protection against a short-circuit at motor outputs
  - -Overtemperature protection with thermal sensor
  - -Open motor/encoder phase.
- Automatic current reduction at motor standstill.
- Electronic damping facility for further acoustic noise and mechanic vibrations reduction.
- Easy wiring with plug-in connectors. Maximum compactness.
- Optoinsulated digital I/O to ensure best EM noise immunity.
- Coupling with stepping motors rated for high insulation is mandatory.
- Warranty: 24 months.

## POWER AND LOGIC CONNECTIONS

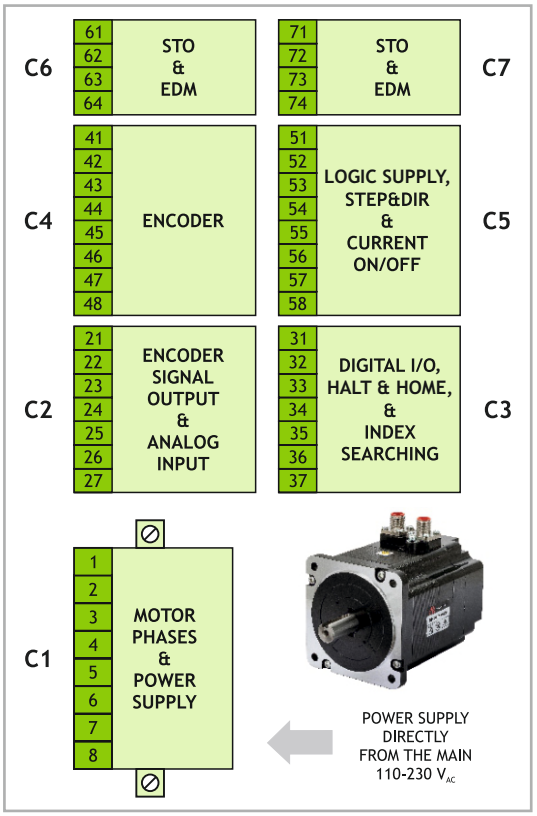


## MECHANICAL DIMENSIONS

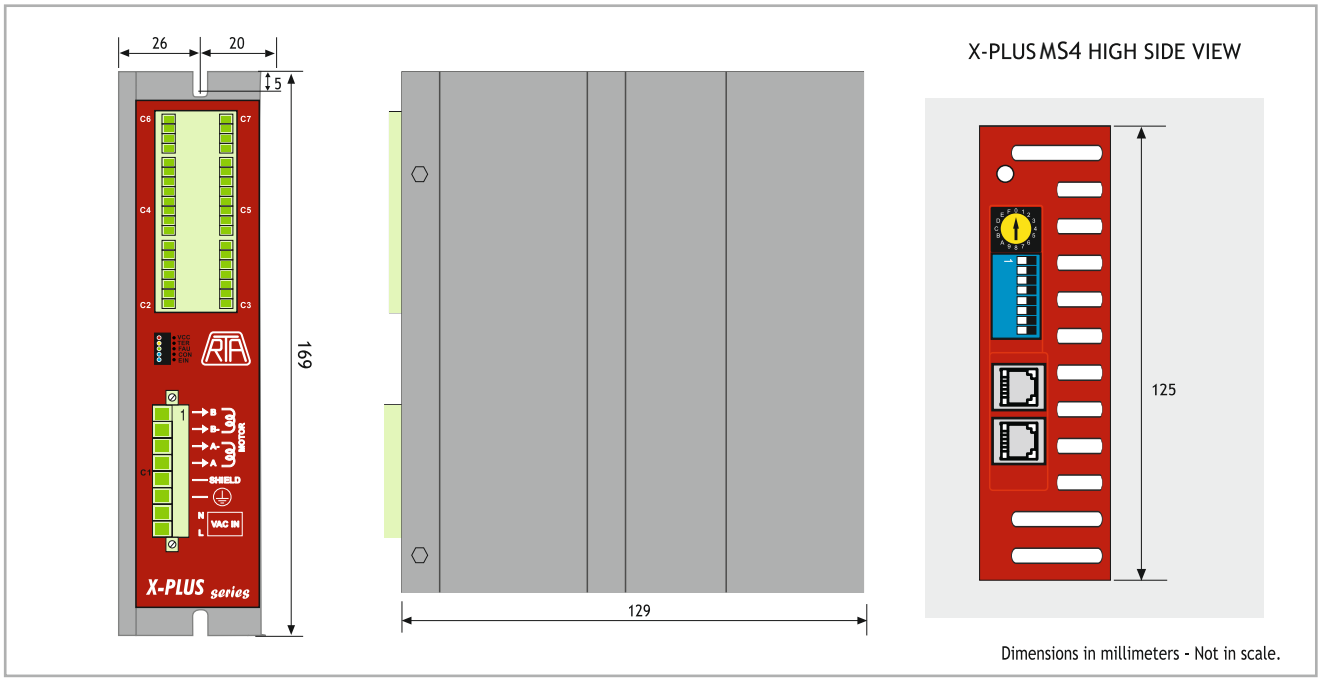

# X-PLUS RS4 Series Drives




## INTRODUCTION

- X-Plus RS4 is a new model of RTA flagship high-power stepping motor drive with Step & Direction and Analog Input interface.
- The embedded Auto-Sync function with encoder enhances the drive features and optimizes the motor performances.
- Also available with Modbus RTU interface.

## HIGHLIGHTS

- Embedded Auto-Sync function with encoder, featuring a closed loop positioning.
- Easy parameter setting via DIP switches.
- Modes of operation: STEP&DIR or Analog Input velocity setpoint (± 10 V) for application where SPEED CONTROL is needed.
- Integrated system for back EMF energy dissipation with optional external resistor.
- LED diagnostic function.
- Zero index searching function.
- Encoder signal output functionality included.




AUTO SYNC FUNCTION

## STO FUNCTION FEATURES

- Safe Torque Off (STO) function - SIL3-PIe
- Error Detection Monitor (EDM) output

SIL3 SAFE TORQUE OFF (STO)

## ONE OF THE MOST COMPACT DRIVES WITH POWER INPUT DIRECTLY FROM THE MAIN AC SUPPLY (110 - 230 VAC)

| Series | Model | $V_{AC}$ range | $I_{NP}$ min. (Peak value) | $I_{NP}$ max. (Peak value) | Dimensions |
|---|---|---|---|---|---|
| | | (Volt) | (Amp) | (Amp) | (mm) |
| X-PLUS | RS4 | 110 to 230 +/- 15% | 1.2 | 4.8 | 169x129x46 |

## TECHNICAL FEATURES

- Range of operating nominal voltage: 110-230 $V_{AC}$.
- Range of current motor settings: 1.2-4.8 A.
  Setting up to four possible values by means of dip-switches.
- Microstepping: 1600, 3200, 6400 and 12800 steps/revolutions
  Setting by means of dip-switches.
- Various encoder resolution available.
- Automatic current reduction at motor standstill.
- Protections:

  -Protection against under-voltage and over-voltage.
  -Protection against a short-circuit at motor outputs.
  -Overtemperature protection with thermal sensor.
  -Open motor/encoder phase.
- Electronic damping facility for further acoustic noise and mechanic vibrations reduction.
- Easy wiring with plug-in connectors .
  Maximum compactness.
- Optoinsulated digital I/O to ensure best EM noise immunity.
- Coupling with stepping motors rated for high insulation is mandatory.
- Warranty: 24 months.




## POWER AND LOGIC CONNECTIONS

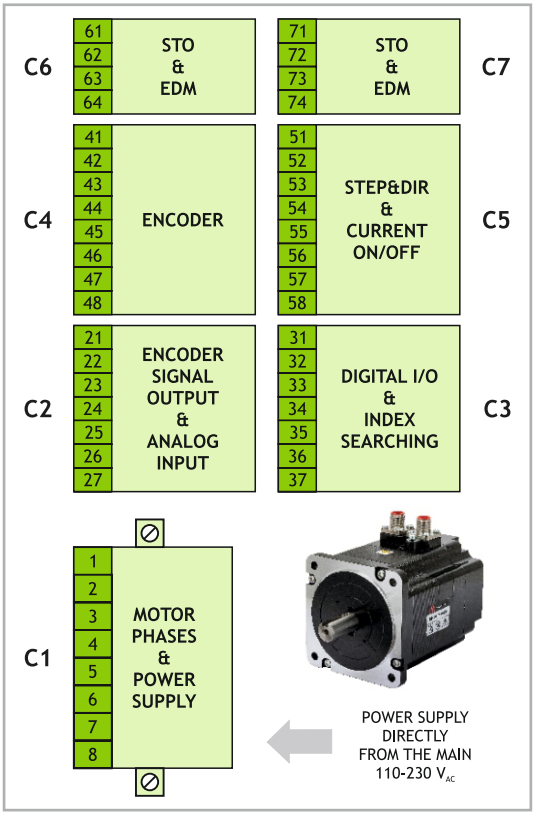


SCAN THE QR CODE TO WATCH A VIDEO ON THE AUTO-SYNC FUNCTION

AUTO SYNC FUNCTION

## MECHANICAL DIMENSIONS

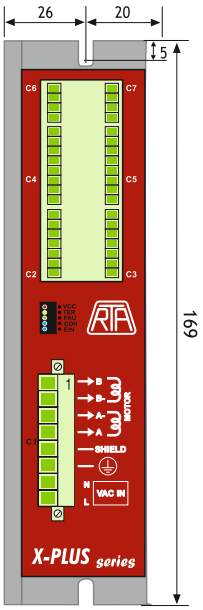


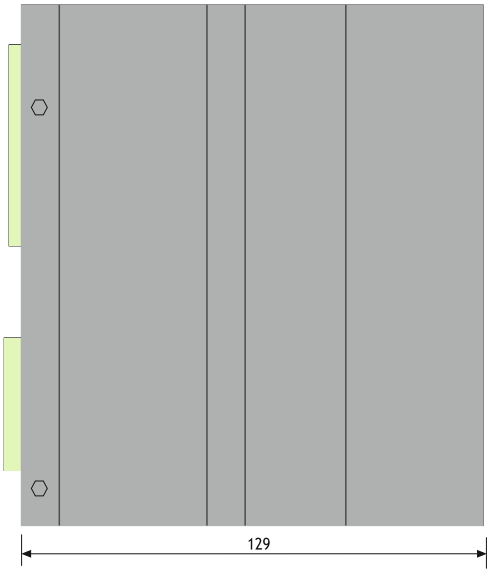


X-PLUS RS4 HIGH SIDE VIEW

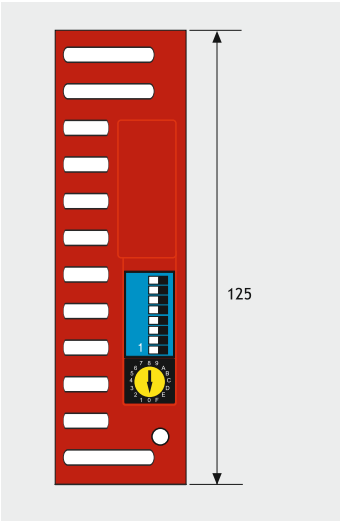


Dimensions in millimeters - Not in scale.

# R-MOD ET Combo Unit

NEW! Flange size Nema 23

EtherCAT®

## INTRODUCTION

R-MOD ET is a series of combo-units in two sizes with integrated microstep bipolar chopper EtherCAT drives, based on battery-less multi-turn absolute encoder.

## HIGHLIGHTS

FULL CLOSED LOOP

- New generation Full Closed Loop Absolute Encoder version available
- Holding Torque up to 300 Ncm
- Communication by means of EtherCAT interface
- Different Operation Modes
- Different flange sizes (NEMA 23 / NEMA 24)
- Different HOMING operation modes
- PROXIMITY hardware input
- AUTO-SYNC function
- Battery-less Multi-turn ABSOLUTE ENCODER versions

AUTO SYNC FUNCTION

BATTERY-LESS ABSOLUTE ENCODER

CE

SPACE SAVING SOLUTION

Please refer to download.rta.it for technical specifications

*Starter kit and cable set available.*

SIDE VIEW




TOP VIEW

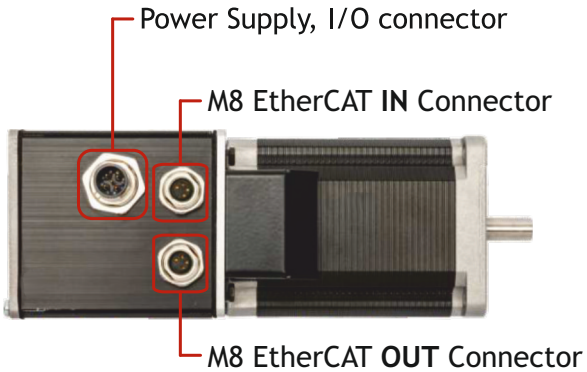


*Front Brake and/or Gearbox versions available*

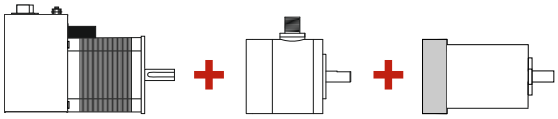


*SCAN THE QR CODE TO WATCH A VIDEO ON THE AUTO-SYNC FUNCTION*

AUTO SYNC FUNCTION

Incremental encoder version also available.

## SIZES AND PERFORMANCES

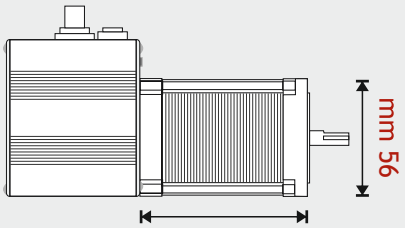


mm 75.8 (2H) **Holding Torque:** 165 Ncm

mm 53.8 (1H) **Holding Torque:** 110 Ncm

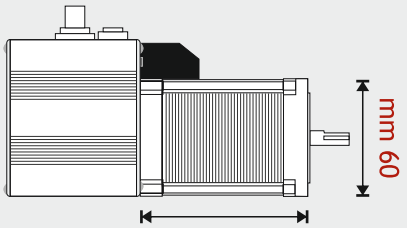


mm 85.8 (2H) **Holding Torque:** 300 Ncm

mm 53.8 (1H) **Holding Torque:** 170 Ncm

## CONNECTION SCHEME

**CN1**

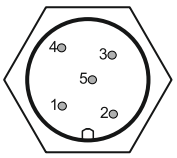


1: Input (PX / Touch probe)
2: Power supply
3: Input (PX / Touch probe)
4: GND
5: Logic power supply

**CN2**




**EtherCAT OUT (Female)**

**CN3**




**EtherCAT IN (Female)**

1: Trasmit Data +
2: Receive Data +
3: Trasmit Data -
4: Receive data -

## TORQUE/SPEED CURVE

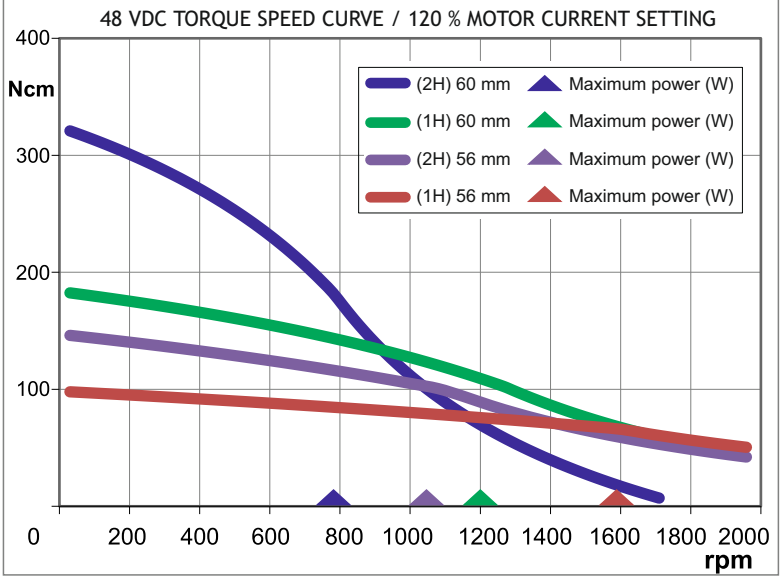


## MECHANICAL DIMENSIONS (mm)

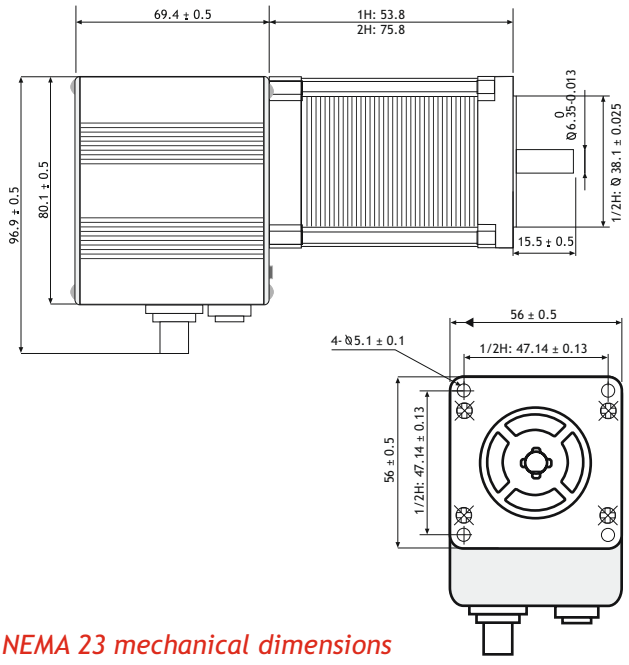


*NEMA 23 mechanical dimensions*

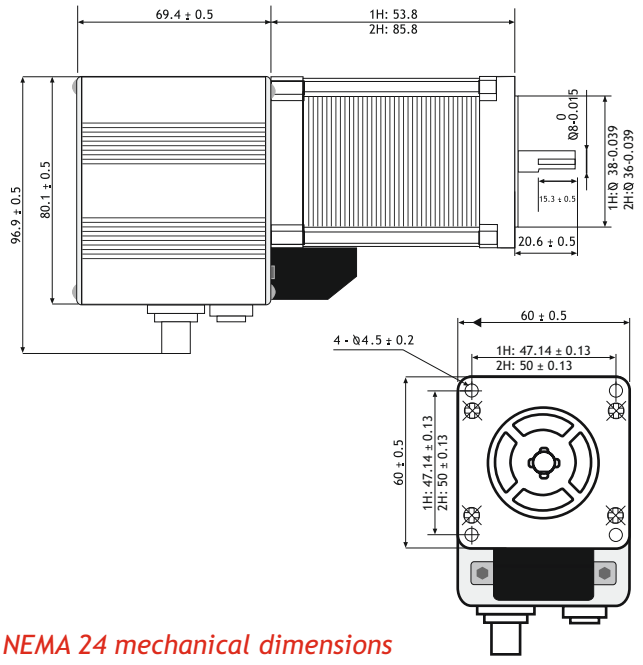


*NEMA 24 mechanical dimensions*

# HI MOD ET/ETS Combo Unit

EtherCAT®

3rd FIRMWARE GENERATION

## INTRODUCTION

HI-MOD ETS is a series of stepping motors in three sizes with integrated ministep bipolar chopper EtherCAT drives and STO Function, based on battery-less multi-turn absolute encoder.

## HIGHLIGHTS

FULL CLOSED LOOP

- New generation Full Closed Loop Absolute Encoder versions available
- Holding Torque up to 920 Ncm
- Communication by means of EtherCAT interface
- Different Operation Modes
- Available Inputs / Outputs
- Touch probe hardware input
- AUTO-SYNC function
- Battery-less Multi-turn ABSOLUTE ENCODER versions
- STO Function - SIL3 with Error Detection Monitor

SIDE VIEW

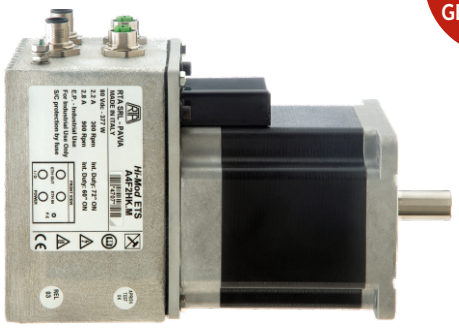

TOP VIEW

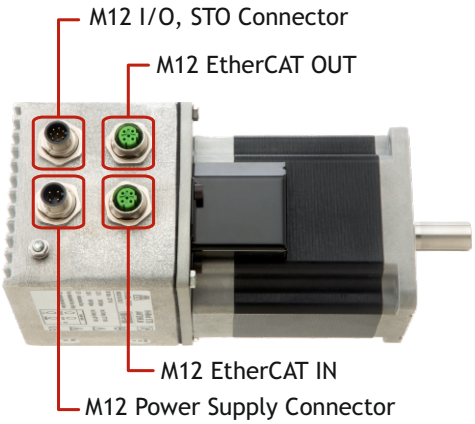


*Front Brake and/or Gearbox versions available*

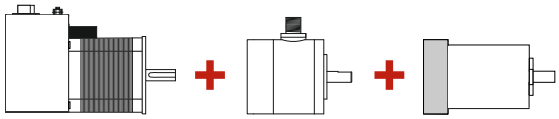


AUTO SYNC FUNCTION

SPACE SAVING SOLUTION

BATTERY-LESS ABSOLUTE ENCODER

CE

STO SIL3 SAFE TORQUE OFF (STO)

M12 CONNECTOR

*SCAN THE QR CODE TO WATCH A VIDEO ON THE AUTO-SYNC FUNCTION*

AUTO SYNC FUNCTION

**Please refer to download.rta.it for technical specifications**

| Models | Motor Lenght (mm) | Holding Torque (Ncm) | Encoder Type | Digital In/Out | STO | Rated Voltage (VDC) |
|---|---|---|---|---|---|---|
| **HI-MOD ETS A4K2HK.M** *Full Closed Loop* | 96.5 | 700 | Battery-less Multi-turn Absolute | 2/2 | ✓ | 48-80 |
| **HI-MOD ET A5K2HK.M** *Full Closed Loop* | 96·5 | 700 | Battery-less Multi-turn Absolute | 2/2 | X | 48-80 |
| 140 VDC **HI-MOD ETS A4K2RK.M** *Full Closed Loop* | 96.5 | 700 | Battery-less Multi-turn Absolute | 2/2 | ✓ | 80-140 |
| 140 VDC **HI-MOD ET A5K2RK.M** *Full Closed Loop* | 96.5 | 700 | Battery-less Multi-turn Absolute | 2/2 | X | 80-140 |

*Other models upon request*

## SIZES AND PERFORMANCES

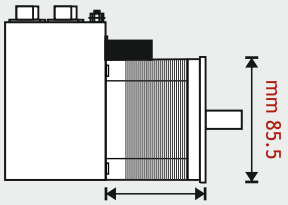


mm 66 (1H)

**Holding Torque:** 360 Ncm

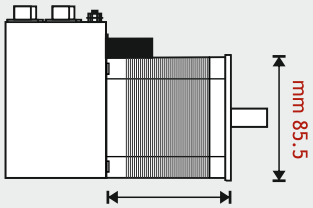


mm 96.5 (2H)

**Holding Torque:** 700 Ncm

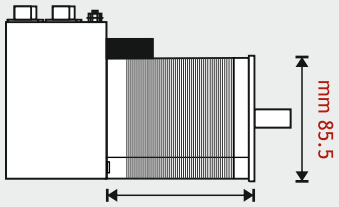


mm 127 (3H)

**Holding Torque:** 920 Ncm

## CONNECTION SCHEME

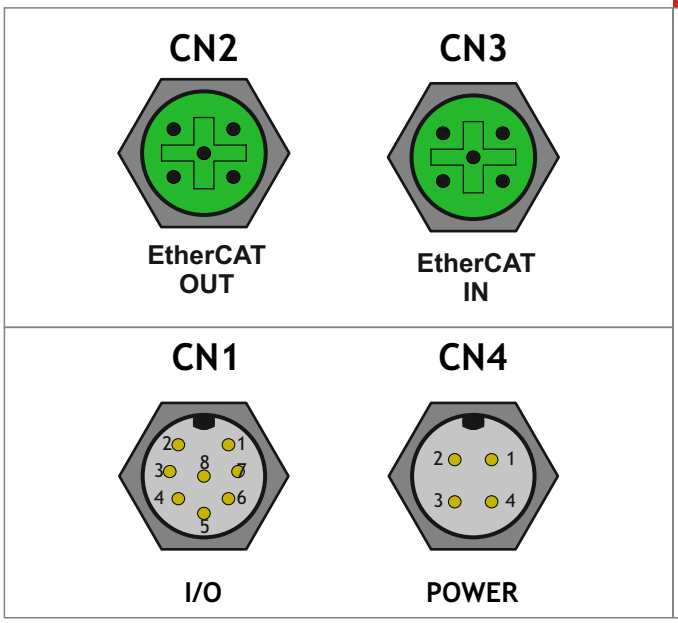


## TORQUE/SPEED CURVE

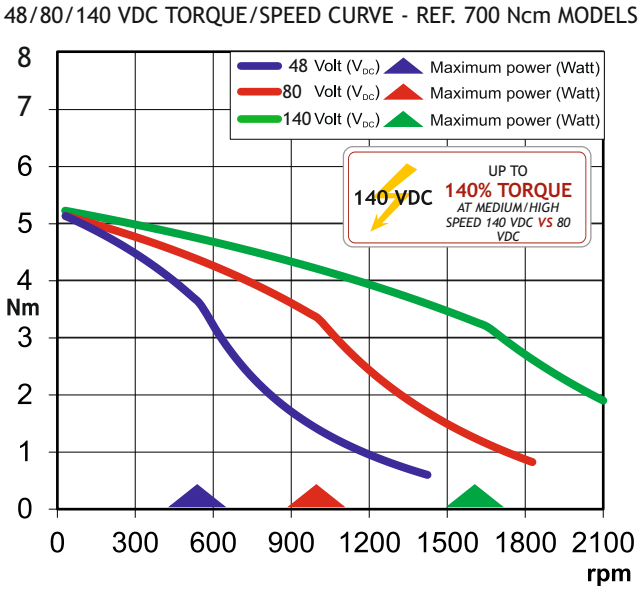


## MECHANICAL DIMENSIONS (mm)

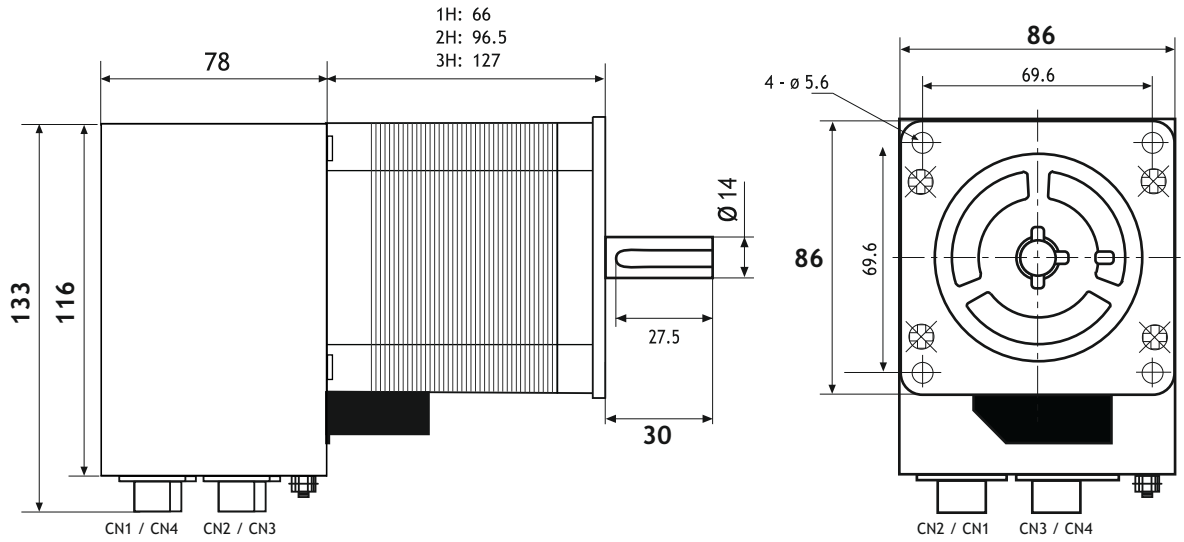


*Starter kit and cable set available.*

STEPPING MOTOR DRIVES ACCESSORIES

# SWITCHING POWER SUPPLY

# R-UHP 1000-48 SWITCHING POWER SUPPLY

## Main Features

- 21 A output - 48 VDC
- AC input voltage range:90~264 VAC
- -30~+70 °C ambient temperature
- Protections: Short Circuit, Overload, Over Voltage, Over Temperature
- $V_{DC_OK}$ signal active
- Led indicator for power on
- Warranty: 24 months

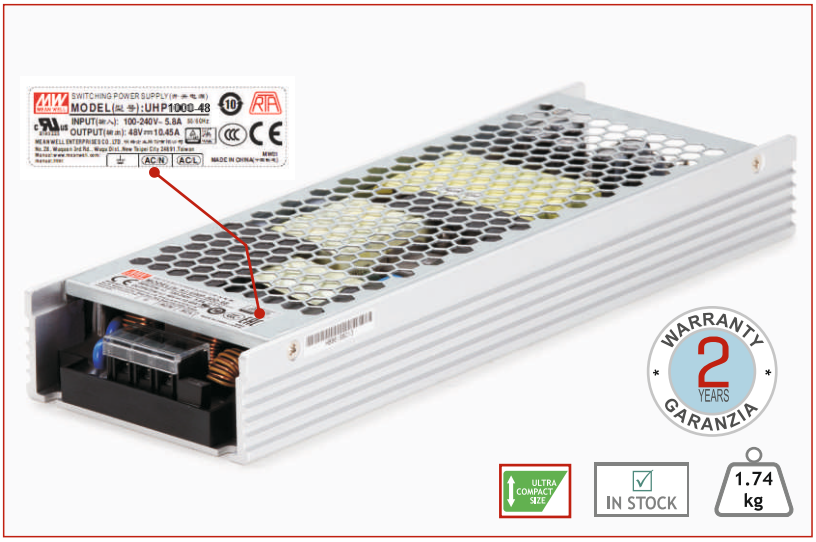


## Dimensions (Units:mm)

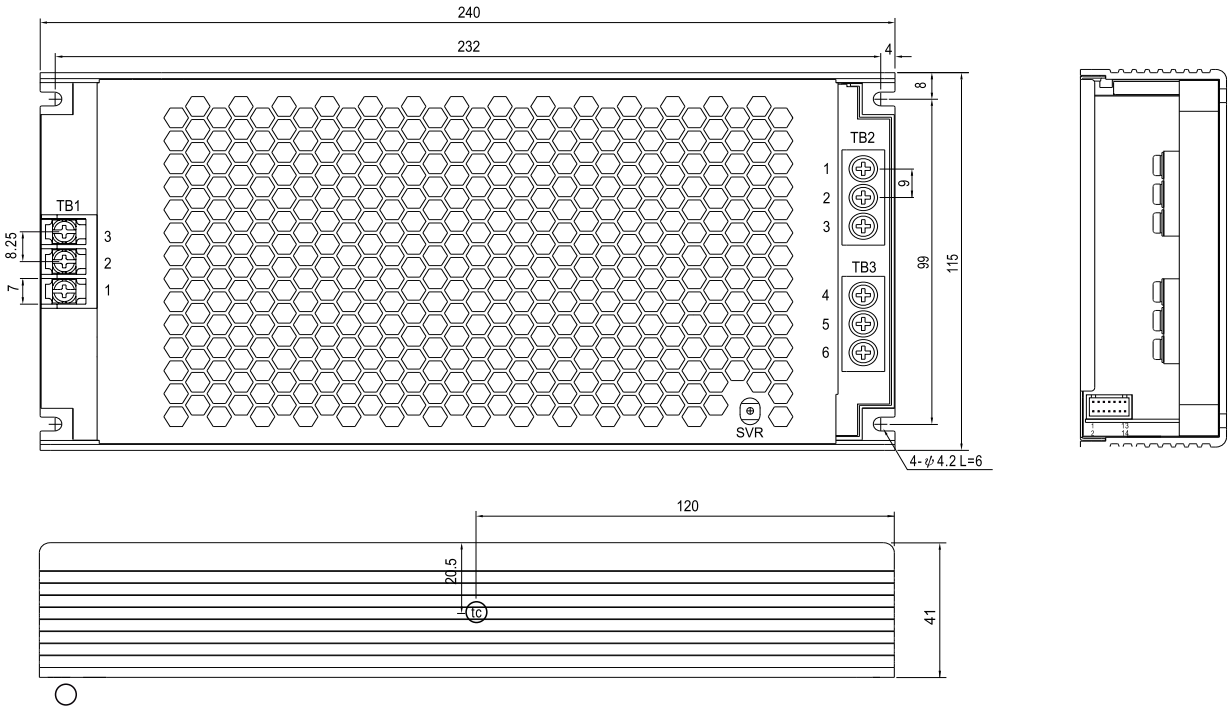


## MORE INFO

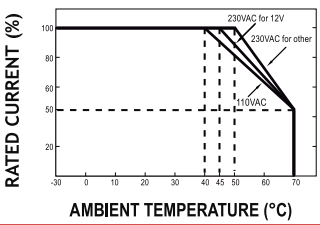


DERATING CURVE

## Specifications

| MODEL | | R-UHP 1000-48 |
|---|---|---|
| OUTPUT | DC VOLTAGE | 48V |
| | RATED CURRENT | 21A |
| | RATED POWER | 1008W |
| | VOLTAGE ADJ. RANGE | 48 ~ 57.6V |
| | VOLTAGE TOLERANCE Note. | ±1.0% |
| | LINE REGULATION | ±0.5% |
| | LOAD REGULATION | ±0.5% |
| INPUT | VOLTAGE RANGE Note.3 | 90 ~ 264VAC 127 ~ 370VDC |
| | FREQUENCY RANGE | 47 ~ 63Hz |
| | EFFICIENCY | 96% |
| | AC CURRENT (Typ.) | 10.1A/115VAC 5.3A/230VAC |
| | OVERLOAD | 105 ~ 120% rated output power |
| | | Protection type: Constant current limiting with delay shutdown after 3 seconds, re-power to cover |
| | OVER VOLTAGE | 59 ~ 66 V |
| | | Protection type: Shut down O/P voltage, re-power on to recover |
| | OVER TEMPERATURE | Protection type: Shut down O/P voltage, recovers automatically after temperature goes down |
| FUNCTION | DC_OK SIGNAL(Optional) | The TTL signal out, PSU turn on=4.5 ~ 5.5V; PSU turn off= -01 ~ 0.5V |
| ENVIRONMENT | WORKING TEMP. | -30 ~ +70°C (Refer to «Derating Curve») |
| | WORKING HUMIDITY | 20 ~ 90% RH non-condensing |
| | VIBRATION | 10 ~ 500Hz, 5G 10min./1cycle, 60min. each along X, Y, Z axes |
| SAFETY & EMC (Note.5) | SAFETY STANDARDS | UL62368-1, TUV BS EN/EN62368-1, EAC TP TC 004 approved; design refer to BS EN/EN61558-1, BS EN/EN60335-1 |
| | WITHSTAND VOLTAGE | I/P-O/P:3 75KVAC I/P-FG:2KVAC O/P-FG:1 25KVAC |
| | ISOLATION RESISTANCE | I/P-O/P, I/P-FG, O/P-FG:100M Ohms/500VDC/25°C/70%RH |
| | EMC EMISSION | Compliance to EN55032,GB9254,Class B, EN55014,EN61000-3-2,-3,EAC TP TC 020 |
| | EMC IMMUNITY | Compliance to EN61000-4-2,3,4,5,6,8,11;EN61000-6-2 (EN50082-2), heavy industry level ,criterial A, EAC TP TC020 |
| OTHERS | MTBF | 218.86K hrs min. Telcordia SR-332 (Bellcore); 69.81K hrs min. MIL-HDBK-217F(25°C) |
| NOTE | 1. All parameters NOT specially mentioned are measured at 230 VAC input, rated load and 25°C ambient temperature.<br>2. Tolerance: includes set up tolerance, line regulation and load regulation.<br>3. Please check the derating curve for more details.<br>4.The ambient temperature derating of 5°C /1000m is needed for operating altitude greater than 2000m (6500ft).<br>5. The power supply is considered a component which will be installed into a final equipment. The final equipment must be re-confirmed that is still meets EMC directives. | |

## Mounting

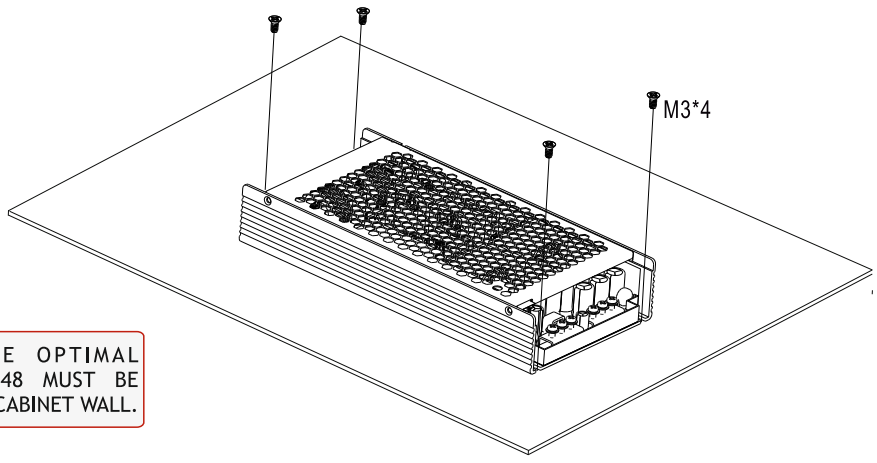


IN ORDER TO ASSURE OPTIMAL DISSIPATION, R-UHP 1000-48 MUST BE INSTALLED ON ELECTRICAL CABINET WALL.



# STEPPING MOTORS

# RH 1S1H

## Dimensions (Unit:mm)

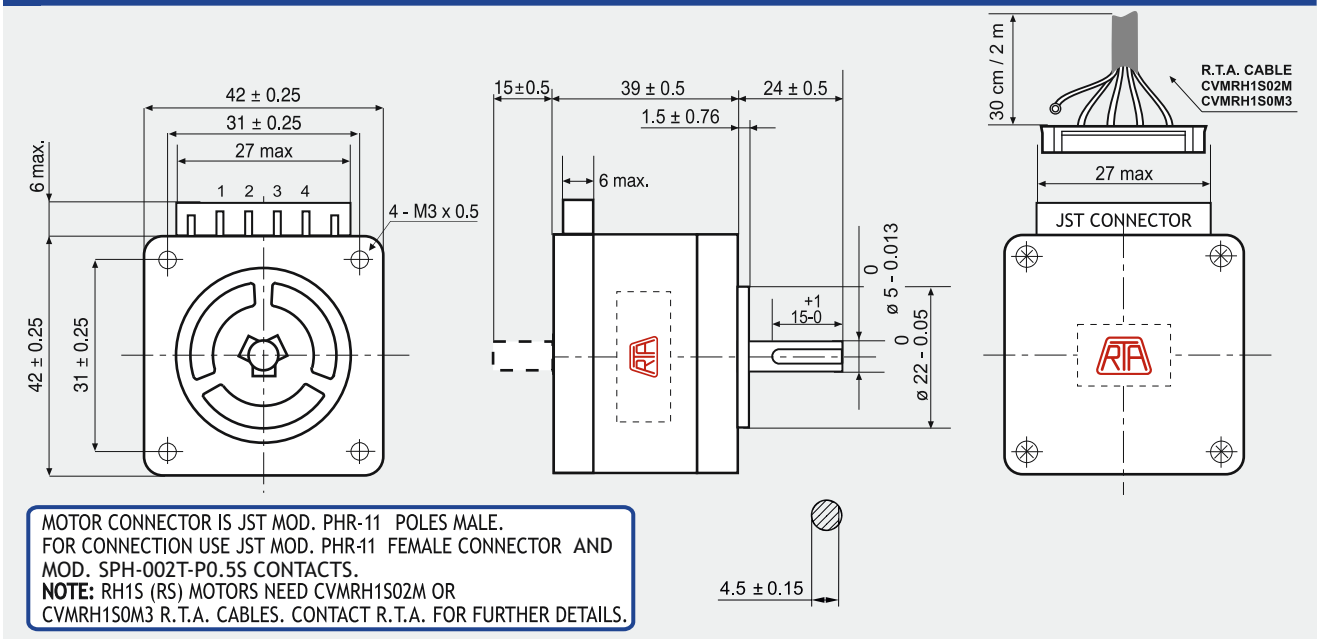


MOTOR CONNECTOR IS JST MOD. PHR-11 POLES MALE.
FOR CONNECTION USE JST MOD. PHR-11 FEMALE CONNECTOR AND MOD. SPH-002T-P0.5S CONTACTS.
**NOTE:** RH1S (RS) MOTORS NEED CVMRH1S02M OR CVMRH1S0M3 R.T.A. CABLES. CONTACT R.T.A. FOR FURTHER DETAILS.

## FEATURES

| MODEL | | RH 1S1H (RH 1S1H-RS) |
|---|---|---|
| BASIC STEP ANGLE | | 1.8 ± 0.09° |
| BIPOLAR CURRENT | (Amp) | 2.0 |
| UNIPOLAR CURRENT | (Amp) | |
| RESISTANCE | (Ohm) | 1.1 |
| INDUCTANCE | (mH) | 2.4 |
| BIPOLAR HOLDING TORQUE | (Ncm) | 43 |
| UNIPOLAR HOLDING TORQUE | (Ncm) | |
| ROTOR INERTIA | (Kgm $^2$ x 10 $^{-7}$) | 46 |
| THEORETICAL ACCELERATION | (rad x sec.$^{-2}$) | 93000 |
| BACK E.M.F. | (V/Krpm) | 21.5 |
| MASS | (Kg) | 0.3 |
| PROTECTION DEGREE | | IP40 |
| LEADS CODE | | V |

Codes between brackets refer to double shaft models.

## TORQUE/SPEED CURVE

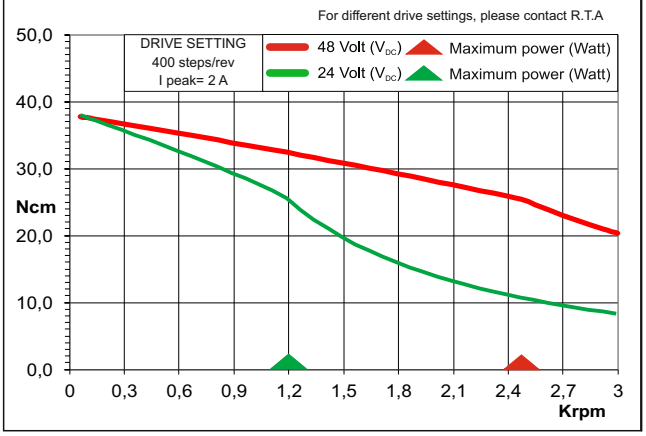


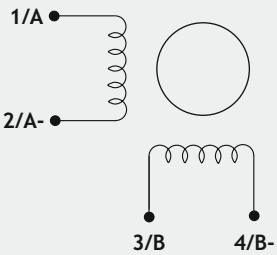




R.T.A. MOTOR CABLE
CVMRH1S02M
CVMRH1S0M3

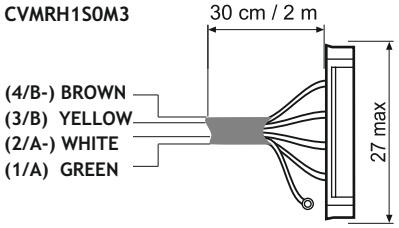


## Suggested R.T.A. drive series: BSD, CSD, FLEX-DRIVE

# RH 1S2H

## Dimensions (Unit:mm)

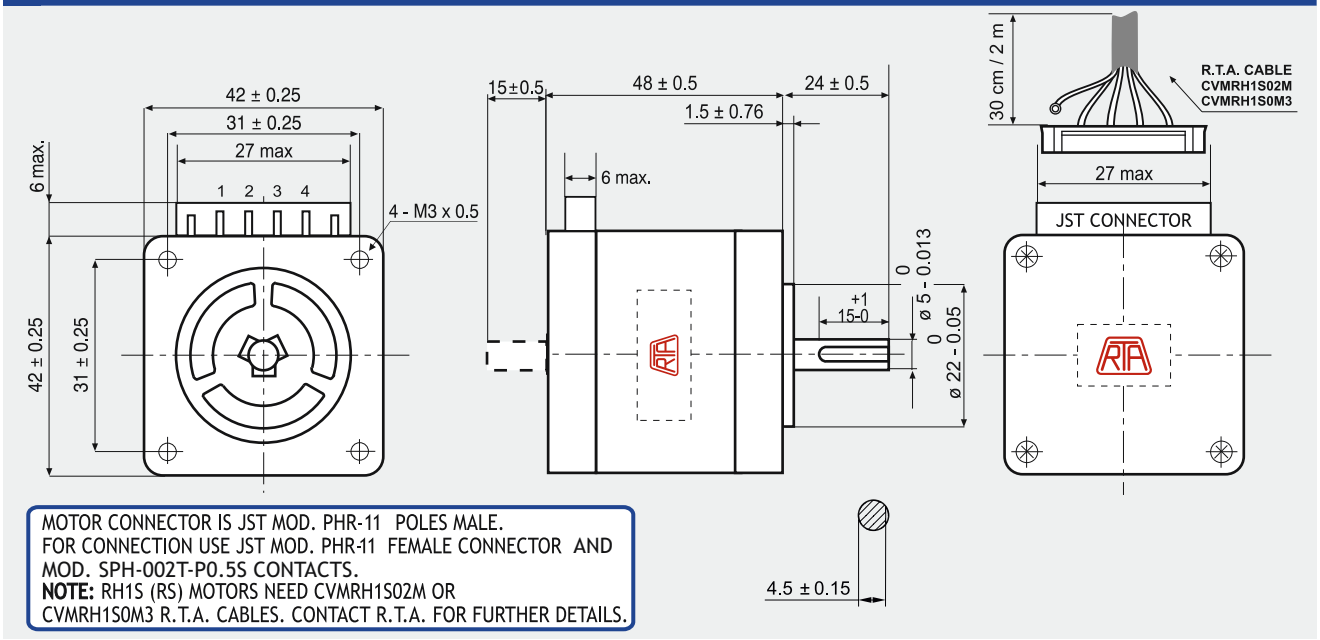


MOTOR CONNECTOR IS JST MOD. PHR-11 POLES MALE.
FOR CONNECTION USE JST MOD. PHR-11 FEMALE CONNECTOR AND MOD. SPH-002T-P0.5S CONTACTS.
**NOTE:** RH1S (RS) MOTORS NEED CVMRH1S02M OR CVMRH1S0M3 R.T.A. CABLES. CONTACT R.T.A. FOR FURTHER DETAILS.

## FEATURES

| MODEL | | RH 1S2H (RH 1S2H-RS) |
|---|---|---|
| BASIC STEP ANGLE | | 1.8 ± 0.09° |
| BIPOLAR CURRENT | (Amp) | 2.3 |
| UNIPOLAR CURRENT | (Amp) | |
| RESISTANCE | (Ohm) | 0.93 |
| INDUCTANCE | (mH) | 2.2 |
| BIPOLAR HOLDING TORQUE | (Ncm) | 56 |
| UNIPOLAR HOLDING TORQUE | (Ncm) | |
| ROTOR INERTIA | (Kgm $^2$ x 10 $^{-7}$) | 63 |
| THEORETICAL ACCELERATION | (rad x sec.$^{-2}$) | 89000 |
| BACK E.M.F. | (V/Krpm) | 24.3 |
| MASS | (Kg) | 0.38 |
| PROTECTION DEGREE | | IP40 |
| LEADS CODE | | V |

Codes between brackets refer to double shaft models.

## TORQUE/SPEED CURVE

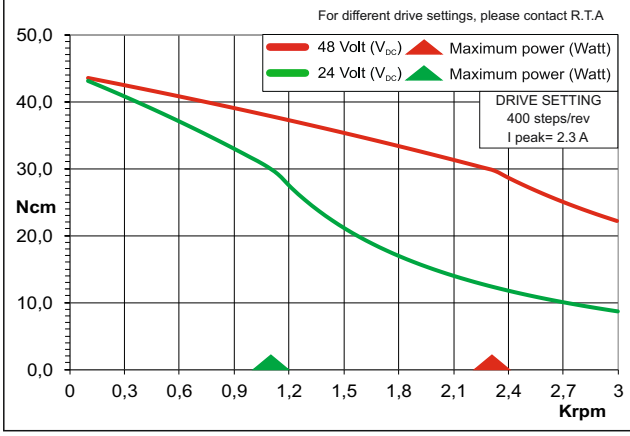


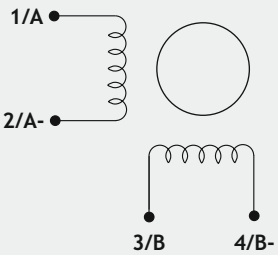


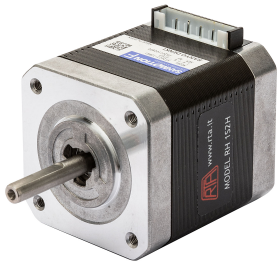

R.T.A. MOTOR CABLE
CVMRH1S02M
CVMRH1S0M3

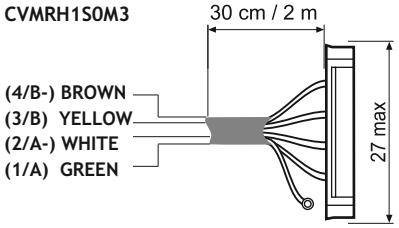


## Suggested R.T.A. drive series: BSD, CSD, FLEX-DRIVE

# RH 1S3H

## Dimensions (Unit:mm)

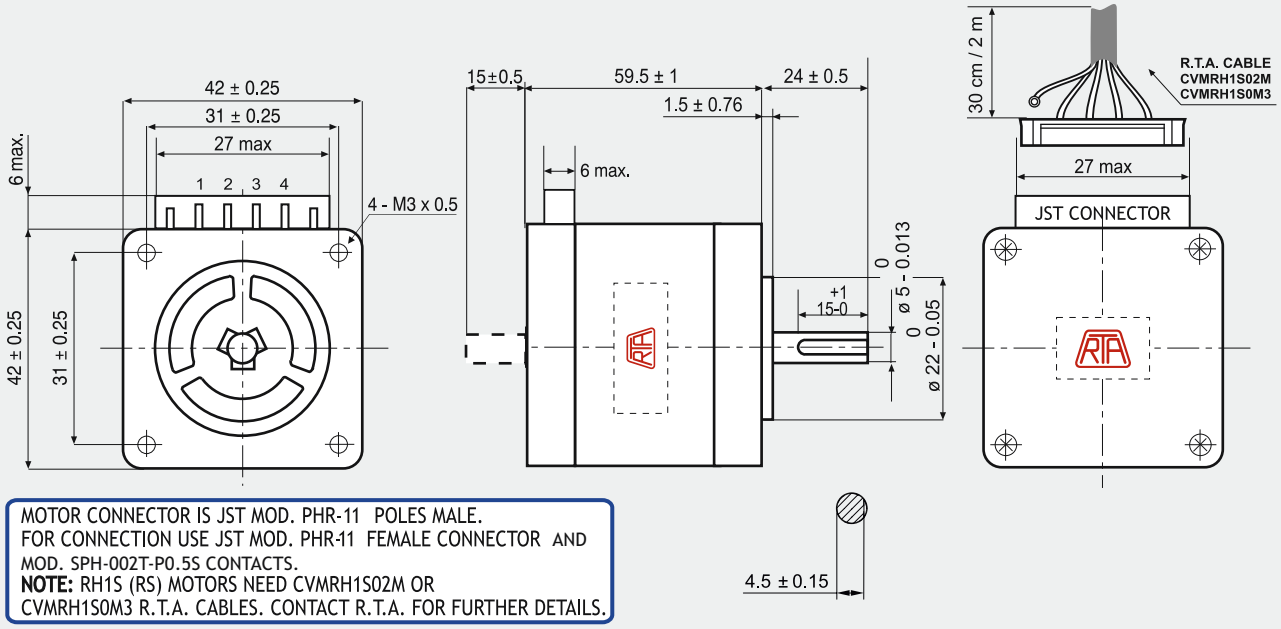


MOTOR CONNECTOR IS JST MOD. PHR-11 POLES MALE.
FOR CONNECTION USE JST MOD. PHR-11 FEMALE CONNECTOR AND MOD. SPH-002T-P0.5S CONTACTS.
**NOTE:** RH1S (RS) MOTORS NEED CVMRH1S02M OR CVMRH1S0M3 R.T.A. CABLES. CONTACT R.T.A. FOR FURTHER DETAILS.

## FEATURES

| MODEL | | RH 1S3H (RH 1S3H-RS) |
|---|---|---|
| BASIC STEP ANGLE | | 1.8 ± 0.09° |
| BIPOLAR CURRENT | (Amp) | 2.3 |
| UNIPOLAR CURRENT | (Amp) | |
| RESISTANCE | (Ohm) | 1.2 |
| INDUCTANCE | (mH) | 3.0 |
| BIPOLAR HOLDING TORQUE | (Ncm) | 80 |
| UNIPOLAR HOLDING TORQUE | (Ncm) | |
| ROTOR INERTIA | (Kgm $^2$ x 10 $^{-7}$) | 94 |
| THEORETICAL ACCELERATION | (rad x sec.$^{-2}$) | 85100 |
| BACK E.M.F. | (V/Krpm) | 34.7 |
| MASS | (Kg) | 0.51 |
| PROTECTION DEGREE | | IP40 |
| LEADS CODE | | V |

Codes between brackets refer to double shaft models.

## TORQUE/SPEED CURVE

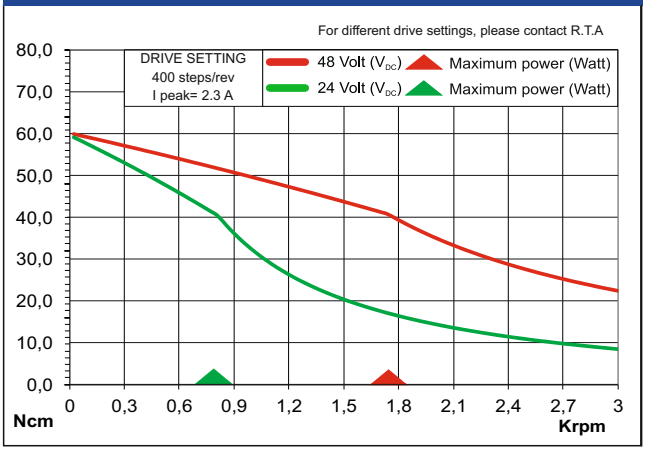


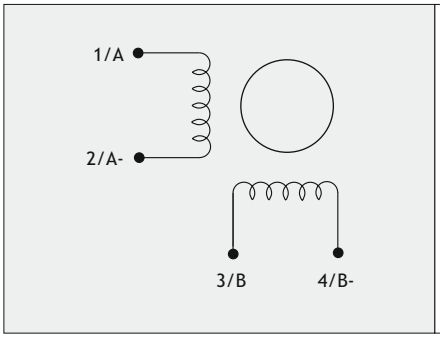


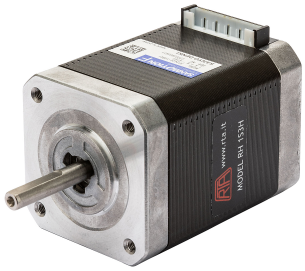

**R.T.A. MOTOR CABLE**
**CVMRH1S02M**
**CVMRH1S0M3**

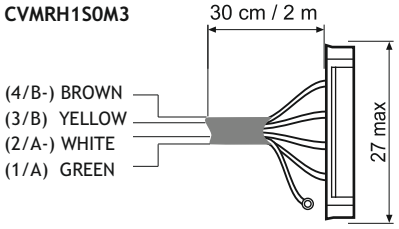


Suggested R.T.A. drive series: BSD, CSD, FLEX-DRIVE

# RH 1S1H-0XX0

## Dimensions (Unit:mm)

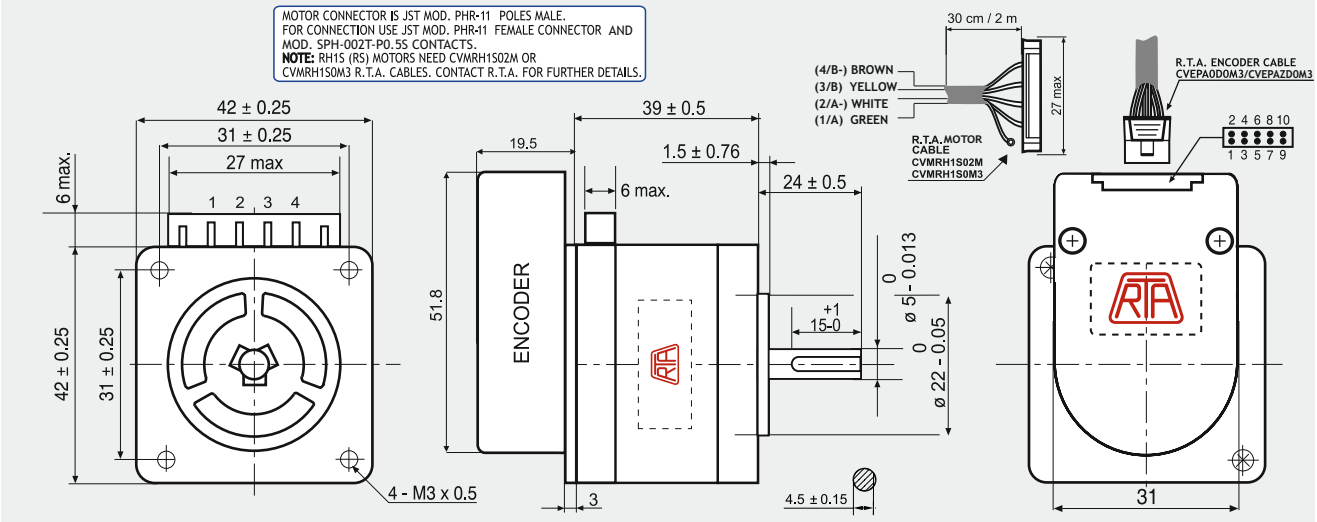


| ENCODER OPTIONS: | | RH 1S1H-04D0 | RH 1S1H-04E0 | RH 1S1H-0HE0 |
|---|---|---|---|---|
| RESOLUTION | | 400 cpr | 400 cpr | 4000 cpr |
| INDEX | | No | Yes | Yes |
| CURRENT CONSUMPTION | (mA) | 50 | 50 | 85 |
| HIGH LEVEL OUTPUT | (Volt) | 5 (TIP) - 4.75 (MIN) ($I_{MAX}$=25mA) | 3.4 (TIP) - 2.4 (MIN) ($I_{MAX}$=20mA) | 3.4 (TIP) - 2.4 (MIN) ($I_{MAX}$=20mA) |
| LOW LEVEL OUTPUT | (Volt) | 0.25 (TIP) - 0.6 (MAX) ($I_{MAX}$=25mA) | 0.2 (TIP) - 0.4 (MAX) ($I_{MAX}$=20mA) | 0.2 (TIP) - 0.4 (MAX) ($I_{MAX}$=20mA) |
| OUTPUT SIGNAL | | Differential | Differential | Differential |
| MAXIMUM FREQUENCY | (KHz) | 100 | 100 | 720 |
| POWER SUPPLY VOLTAGE | (Volt) | 5 $V_{DC}$ ±10% | 5 $V_{DC}$ ±10% | 5 $V_{DC}$ ±10% |

## FEATURES

| MODEL | | RH 1S1H |
|---|---|---|
| BASIC STEP ANGLE | | 1.8 ± 0.09° |
| BIPOLAR CURRENT | (Amp) | 2.0 |
| UNIPOLAR CURRENT | (Amp) | |
| RESISTANCE | (Ohm) | 1.1 |
| INDUCTANCE | (mH) | 2.4 |
| BIPOLAR HOLDING TORQUE | (Ncm) | 43 |
| UNIPOLAR HOLDING TORQUE | (Ncm) | |
| ROTOR INERTIA | (Kgm $^2$ x 10 $^{-7}$) | 46 |
| THEORETICAL ACCELERATION | (rad x sec.$^{-2}$) | 93000 |
| BACK E.M.F. | (V/Krpm) | 21.5 |
| MASS | (Kg) | 0.3 |
| PROTECTION DEGREE | | IP40 |
| LEADS CODE | | V |

## TORQUE/SPEED CURVE

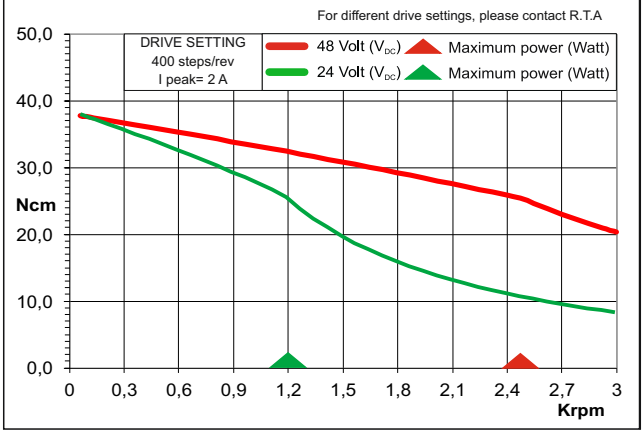


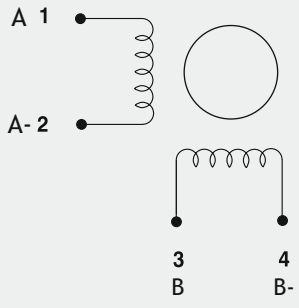


### RTA MOTOR CABLE COLORS

| DESCRIPTION | |
|---|---|
| CHANNEL A | GREEN |
| CHANNEL A- | WHITE |
| CHANNEL B | YELLOW |
| CHANNEL B- | BROWN |

### ENCODER PIN-OUT

| DESCRIPTION | 04D0 PINS | 04E0/0HE0 PINS | R.T.A. CABLE LEADS COLOR |
|---|---|---|---|
| CHANNEL A+ | 6 | 6 | GREEN |
| CHANNEL A- | 5 | 5 | PURPLE |
| CHANNEL B+ | 8 | 8 | BLUE |
| CHANNEL B- | 7 | 7 | BROWN |
| + DC (5V) | 2 | 2 | RED |
| GROUND | 3 | 3 | BLACK |
| INDEX+ | / | 10 | ORANGE |
| INDEX- | / | 9 | WHITE |
| R.T.A. CABLE (30 cm) | CVEPA0D0M3 | CVEPAZD0M3 | |

## Suggested R.T.A. drive series: BSD, CSD, FLEX-DRIVE

# RH 1S2H-0XX0

## Dimensions (Unit:mm)

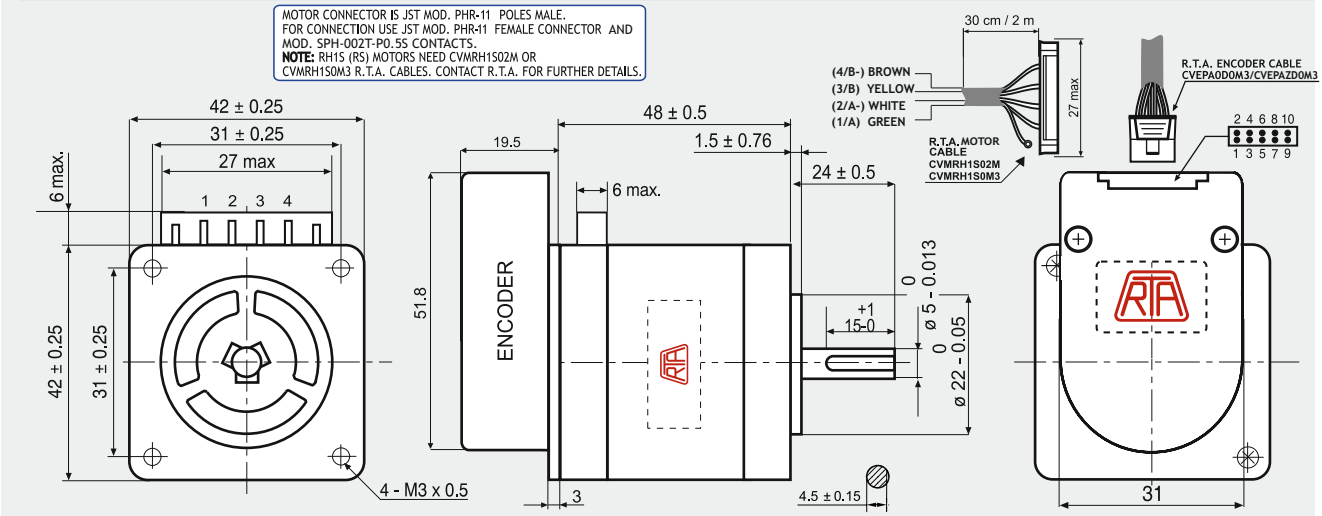


| ENCODER OPTIONS: | | RH 1S2H-04D0 | RH 1S2H-04E0 | RH 1S2H-0HE0 |
|---|---|---|---|---|
| RESOLUTION | | 400 cpr | 400 cpr | 4000 cpr |
| INDEX | | No | Yes | Yes |
| CURRENT CONSUMPTION | (mA) | 50 | 50 | 85 |
| HIGH LEVEL OUTPUT | (Volt) | 5 (TIP) - 4.75 (MIN) ($I_{MAX}$=25mA) | 3.4 (TIP) - 2.4 (MIN) ($I_{MAX}$=20mA) | 3.4 (TIP) - 2.4 (MIN) ($I_{MAX}$=20mA) |
| LOW LEVEL OUTPUT | (Volt) | 0.25 (TIP) - 0.6 (MAX) ($I_{MAX}$=25mA) | 0.2 (TIP) - 0.4 (MAX) ($I_{MAX}$=20mA) | 0.2 (TIP) - 0.4 (MAX) ($I_{MAX}$=20mA) |
| OUTPUT SIGNAL | | Differential | Differential | Differential |
| MAXIMUM FREQUENCY | (KHz) | 100 | 100 | 720 |
| POWER SUPPLY VOLTAGE | (Volt) | 5 $V_{DC}$ ±10% | 5 $V_{DC}$ ±10% | 5 $V_{DC}$ ±10% |

## FEATURES

| MODEL | | RH 1S2H |
|---|---|---|
| BASIC STEP ANGLE | | 1.8 ± 0.09° |
| BIPOLAR CURRENT | (A) | 2.3 |
| UNIPOLAR CURRENT | (A) | |
| RESISTANCE | (Ohm) | 0.93 |
| INDUCTANCE | (mH) | 2.2 |
| BIPOLAR HOLDING TORQUE | (Ncm) | 56 |
| UNIPOLAR HOLDING TORQUE | (Ncm) | |
| ROTOR INERTIA | (Kgm $^2$ x 10 $^{-7}$) | 63 |
| THEORETICAL ACCELERATION | (rad x sec.$^{-2}$) | 89000 |
| BACK E.M.F. | (V/Krpm) | 24.3 |
| MASS | (Kg) | 0.38 |
| PROTECTION DEGREE | | IP40 |
| LEADS CODE | | V |

## TORQUE/SPEED CURVE

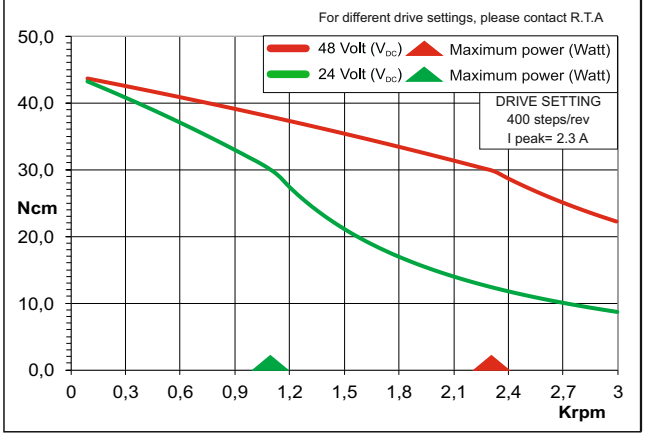


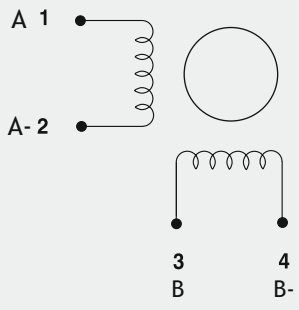


### RTA MOTOR CABLE COLORS

| DESCRIPTION | |
|---|---|
| CHANNEL A | GREEN |
| CHANNEL A- | WHITE |
| CHANNEL B | YELLOW |
| CHANNEL B- | BROWN |

### ENCODER PIN-OUT

| DESCRIPTION | 04D0 PINS | 04E0/0HE0 PINS | R.T.A. CABLE LEADS COLOR |
|---|---|---|---|
| CHANNEL A+ | 6 | 6 | GREEN |
| CHANNEL A- | 5 | 5 | PURPLE |
| CHANNEL B+ | 8 | 8 | BLUE |
| CHANNEL B- | 7 | 7 | BROWN |
| + DC (5V) | 2 | 2 | RED |
| GROUND | 3 | 3 | BLACK |
| INDEX+ | / | 10 | ORANGE |
| INDEX- | / | 9 | WHITE |
| R.T.A. CABLE (30 cm) | CVEPA0D0M3 | CVEPAZD0M3 | |

## Suggested R.T.A. drive series: BSD, CSD, FLEX-DRIVE

# RH 1S3H-0XX0

## Dimensions (Unit:mm)

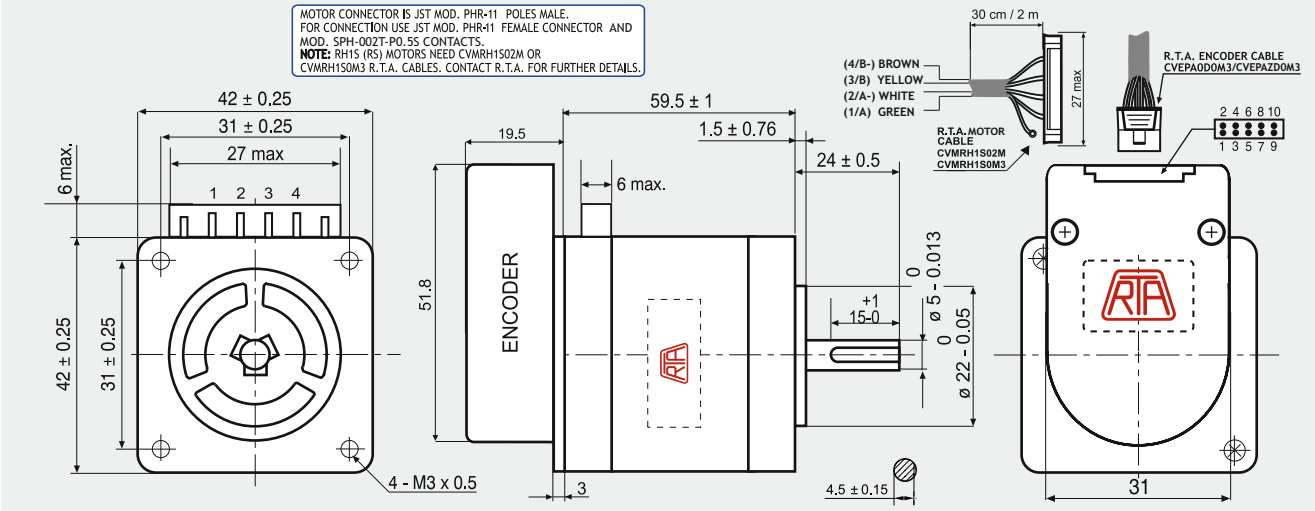


| ENCODER OPTIONS: | | RH 1S3H-04D0 | RH 1S3H-04E0 | RH 1S3H-0HE0 |
|---|---|---|---|---|
| RESOLUTION | | 400 cpr | 400 cpr | 4000 cpr |
| INDEX | | No | Yes | Yes |
| CURRENT CONSUMPTION | (mA) | 50 | 50 | 85 |
| HIGH LEVEL OUTPUT | (Volt) | 5 (TIP) - 4.75 (MIN) ($I_{MAX}$=25mA) | 3.4 (TIP) - 2.4 (MIN) ($I_{MAX}$=20mA) | 3.4 (TIP) - 2.4 (MIN) ($I_{MAX}$=20mA) |
| LOW LEVEL OUTPUT | (Volt) | 0.25 (TIP) - 0.6 (MAX) ($I_{MAX}$=25mA) | 0.2 (TIP) - 0.4 (MAX) ($I_{MAX}$=20mA) | 0.2 (TIP) - 0.4 (MAX) ($I_{MAX}$=20mA) |
| OUTPUT SIGNAL | | Differential | Differential | Differential |
| MAXIMUM FREQUENCY | (KHz) | 100 | 100 | 720 |
| POWER SUPPLY VOLTAGE | (Volt) | 5 $V_{DC}$ ±10% | 5 $V_{DC}$ ±10% | 5 $V_{DC}$ ±10% |

## FEATURES

| MODEL | | RH 1S3H |
|---|---|---|
| BASIC STEP ANGLE | | 1.8 ± 0.09° |
| BIPOLAR CURRENT | (Amp) | 2.3 |
| UNIPOLAR CURRENT | (Amp) | |
| RESISTANCE | (Ohm) | 1.2 |
| INDUCTANCE | (mH) | 3.0 |
| BIPOLAR HOLDING TORQUE | (Ncm) | 80 |
| UNIPOLAR HOLDING TORQUE | (Ncm) | |
| ROTOR INERTIA | (Kgm $^2$ x 10 $^{-7}$) | 94 |
| THEORETICAL ACCELERATION | (rad x sec.$^{-2}$) | 85100 |
| BACK E.M.F. | (V/Krpm) | 34.7 |
| MASS | (Kg) | 0.51 |
| PROTECTION DEGREE | | IP40 |
| LEADS CODE | | V |

## TORQUE/SPEED CURVE

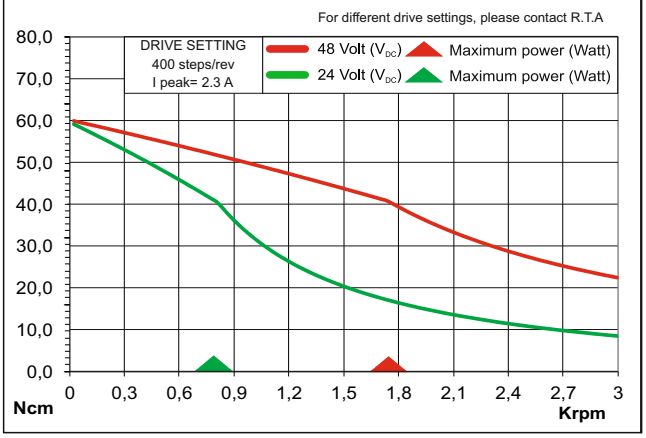


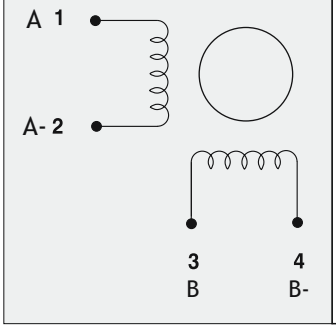


### RTA MOTOR CABLE COLORS

| DESCRIPTION | |
|---|---|
| CHANNEL A | GREEN |
| CHANNEL A- | WHITE |
| CHANNEL B | YELLOW |
| CHANNEL B- | BROWN |

### ENCODER PIN-OUT

| DESCRIPTION | 04D0 PINS | 04E0/0HE0 PINS | R.T.A. CABLE LEADS COLOR |
|---|---|---|---|
| CHANNEL A+ | 6 | 6 | GREEN |
| CHANNEL A- | 5 | 5 | PURPLE |
| CHANNEL B+ | 8 | 8 | BLUE |
| CHANNEL B- | 7 | 7 | BROWN |
| + DC (5V) | 2 | 2 | RED |
| GROUND | 3 | 3 | BLACK |
| INDEX+ | / | 10 | ORANGE |
| INDEX- | / | 9 | WHITE |
| R.T.A. CABLE (30 cm) | CVEPA0D0M3 | CVEPAZD0M3 | |

## Suggested R.T.A. drive series: BSD, CSD, FLEX-DRIVE

# SS2421-5041

PANCAKE TYPE motor

SANYO DENKI
SANMOTION

## Dimensions (Unit:mm)

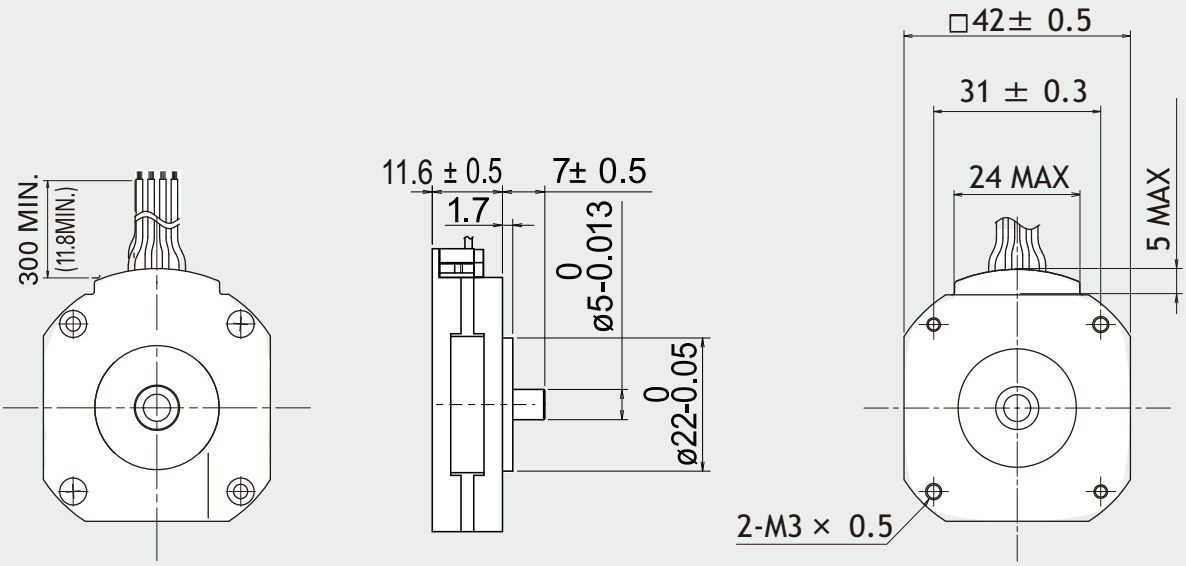


## FEATURES

| MODEL | | SS2421-5041 |
|---|---|---|
| | | |
| BASIC STEP ANGLE | | 1.8° ± 0.09° |
| BIPOLAR CURRENT | (Amp) | 1.0 |
| UNIPOLAR CURRENT | (Amp) | |
| RESISTANCE | (Ohm) | 3.5 |
| INDUCTANCE | (mH) | 1.2 |
| BIPOLAR HOLDING TORQUE | (Ncm) | 8.3 |
| UNIPOLAR HOLDING TORQUE | (Ncm) | |
| ROTOR INERTIA | (Kgm $^2$ x 10 $^{-7}$) | 0.015 |
| THEORETICAL ACCELERATION | (rad x sec.$^{-2}$) | 55000 |
| BACK E.M.F. | (V/Krpm) | 8.0 |
| MASS | (Kg) | 0.07 |
| | | |

## TORQUE/SPEED CURVE

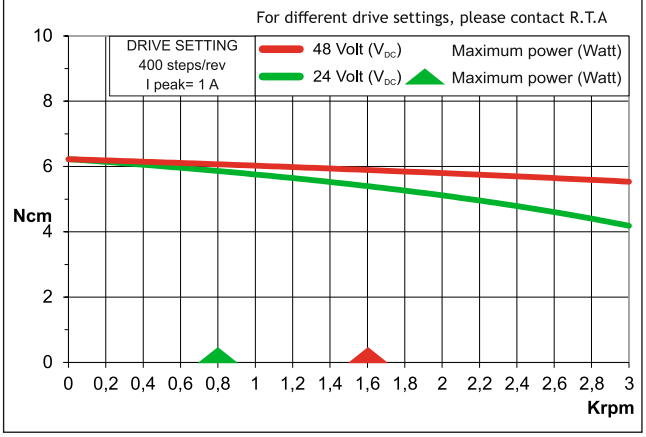


R.T.A. s.r.l. PAVIA (ITALY) SANYO DENKI CO.,Ltd (JAPAN)

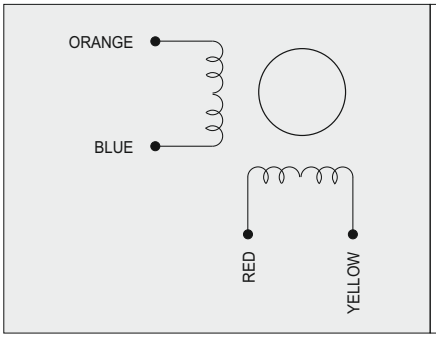


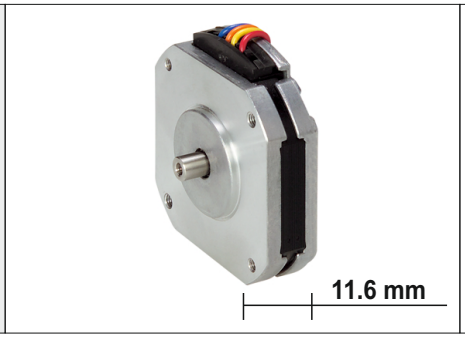


## Suggested driver: contact R.T.A.

# SS2422-5041

PANCAKE TYPE motor

SANYO DENKI
SANMOTION

## Dimensions (Unit:mm)

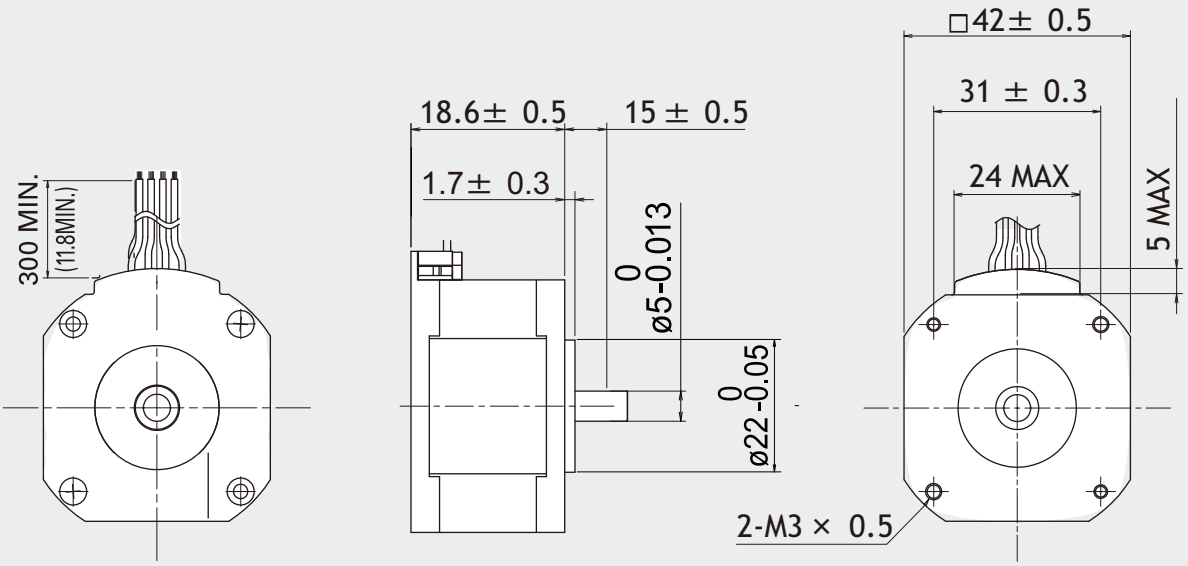


## FEATURES

| MODEL | | SS2422-5041 (SS2422-5011) |
|---|---|---|
| | | |
| BASIC STEP ANGLE | | 1.8° ± 0.09° |
| BIPOLAR CURRENT | (Amp) | 1.0 |
| UNIPOLAR CURRENT | (Amp) | |
| RESISTANCE | (Ohm) | 5.4 |
| INDUCTANCE | (mH) | 2.9 |
| BIPOLAR HOLDING TORQUE | (Ncm) | 18.6 |
| UNIPOLAR HOLDING TORQUE | (Ncm) | |
| ROTOR INERTIA | (Kgm $^2$ x 10 $^{-7}$) | 0.028 |
| THEORETICAL ACCELERATION | (rad x sec.$^{-2}$) | 63000 |
| BACK E.M.F. | (V/Krpm) | 18 |
| MASS | (Kg) | 0.14 |
| | | |

## TORQUE/SPEED CURVE

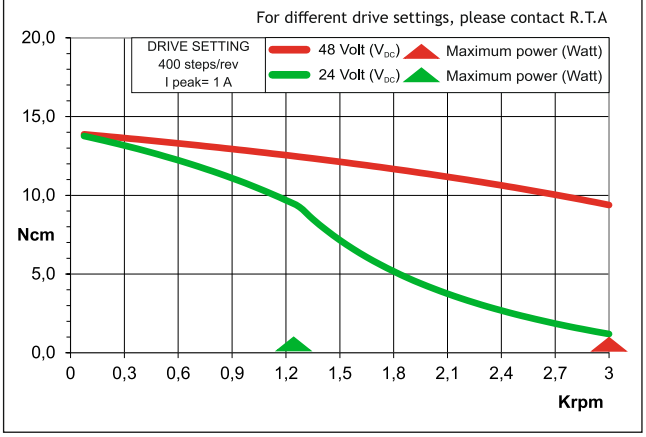


R.T.A. s.r.l. PAVIA (ITALY) SANYO DENKI CO.,Ltd (JAPAN)

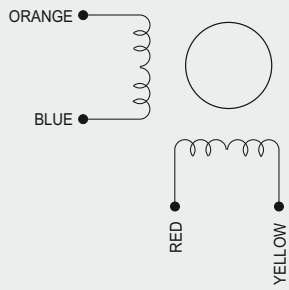


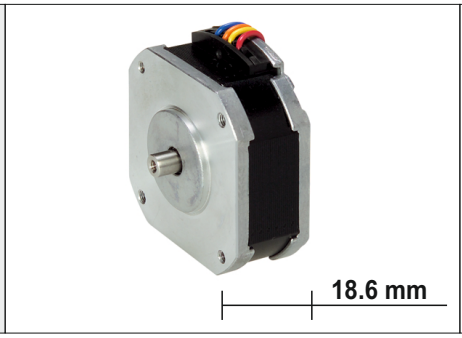


## Suggested driver: contact R.T.A.

# RH 2S1M

## Dimensions (Unit:mm)

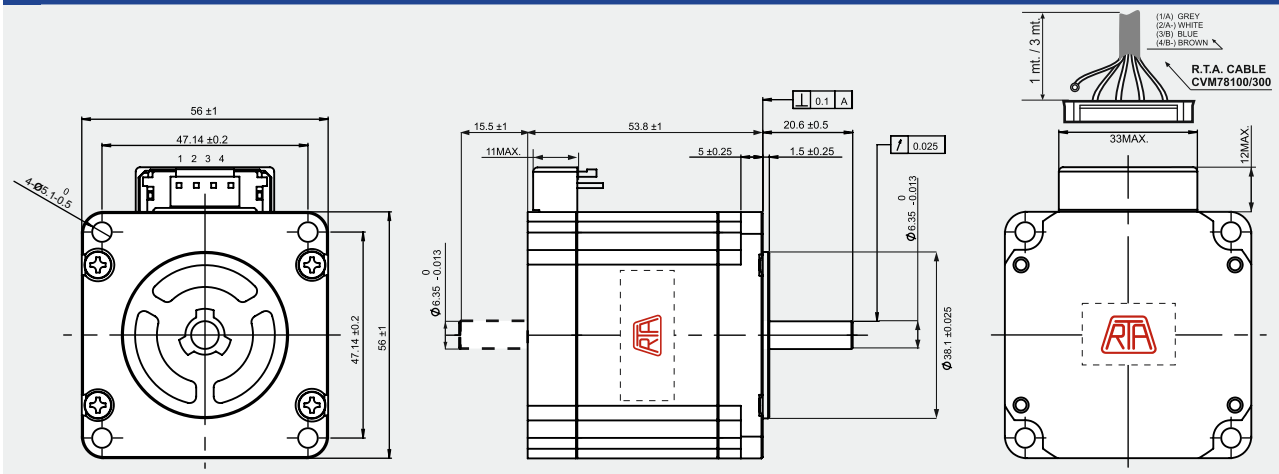


MOTOR CONNECTOR IS JST mod. B4P-VH 4 POLES MALE.
FOR CONNECTION USE JST mod. VHR-4N FEMALE CONNECTOR AND mod. SVH-21 T-P1.1 CONTACTS.
**NOTE:** RH2S (RS) MOTORS NEED CVM78100 AND CVM78300 R.T.A. CABLES. CONTACT R.T.A. FOR FURTHER DETAILS.

**+ 30%**
**HOLDING TORQUE**
THAN THE PREVIOUS «H» SERIES

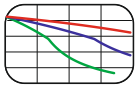

## FEATURES

| MODEL | | RH 2S1M (RH 2S1M-RS) |
|---|---|---|
| BASIC STEP ANGLE | | 1.8 ± 0.09° |
| BIPOLAR CURRENT | (Amp) | 4.0 |
| UNIPOLAR CURRENT | (Amp) | |
| RESISTANCE | (Ohm) | 0.37 |
| INDUCTANCE | (mH) | 1.5 |
| BIPOLAR HOLDING TORQUE | (Ncm) | 140 |
| ROTOR INERTIA | (Kgm $^2$ x 10 $^{-7}$) | 280 |
| THEORETICAL ACCELERATION | (rad x sec.$^{-2}$) | 50000 |
| BACK E.M.F. | (V/Krpm) | 35 |
| MASS | (Kg) | 0.69 |
| INTERNATIONAL STANDARDS | | UL, CSA |
| PROTECTION DEGREE | | IP40 |
| LEADS CODE | | V |

Codes between brackets refer to double shaft models.

## TORQUE/SPEED CURVE

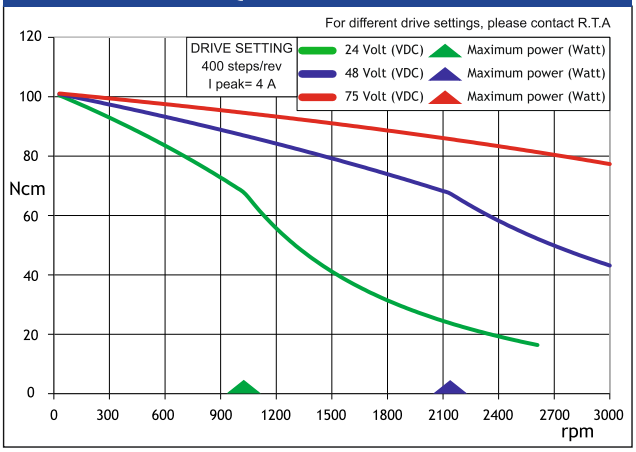


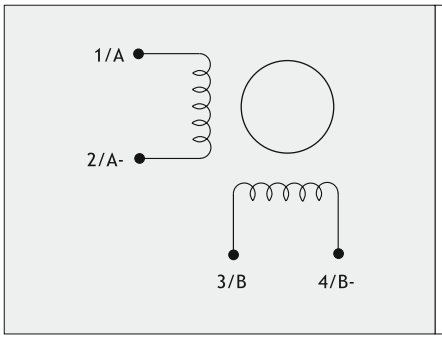


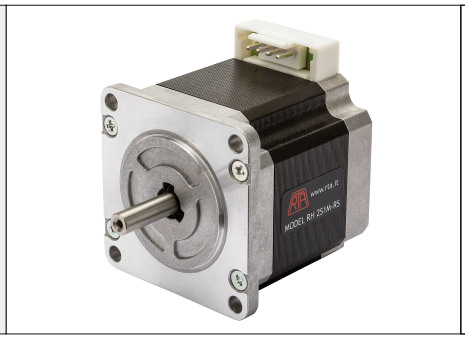

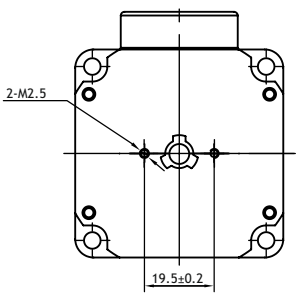


DOUBLE SHAFT MOTORS ONLY.

## Suggested R.T.A. drive series: BSD, CSD, FLEX-DRIVE, NDC

# RH 2S2M

## Dimensions (Unit:mm)

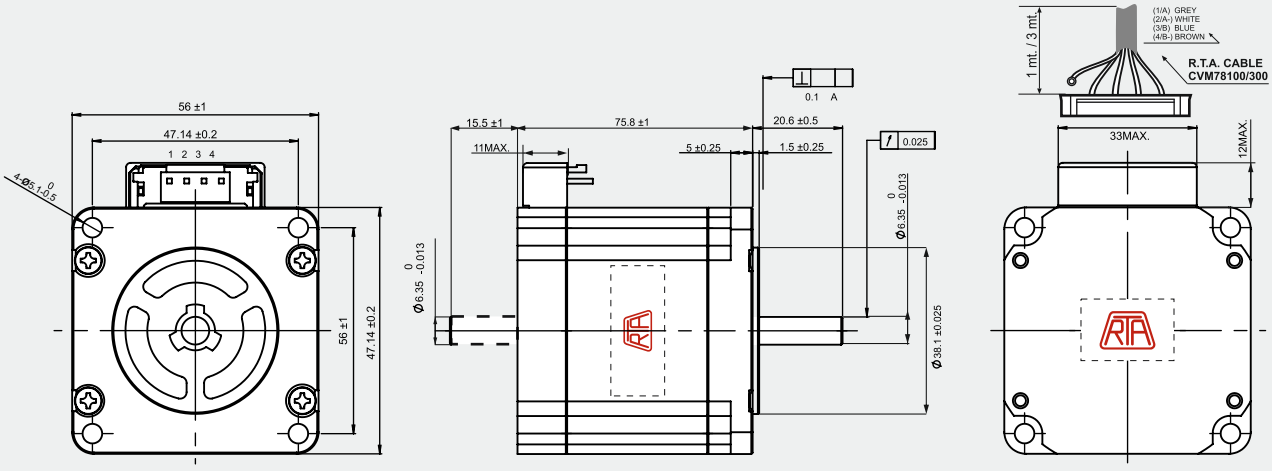


MOTOR CONNECTOR IS JST mod. B4P-VH 4 POLES MALE.
FOR CONNECTION USE JST mod. VHR-4N FEMALE CONNECTOR AND mod. SVH-21 T-P1.1 CONTACTS.
**NOTE:** RH2S (RS) MOTORS NEED CVM78100 AND CVM78300 R.T.A. CABLES. CONTACT R.T.A. FOR FURTHER DETAILS.

**+ 40%**
**HOLDING TORQUE**
THAN THE PREVIOUS «H» SERIES

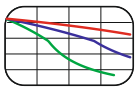

## FEATURES

| MODEL | | RH 2S2M (RH 2S2M-RS) |
|---|---|---|
| BASIC STEP ANGLE | | 1.8 ± 0.09° |
| BIPOLAR CURRENT | (Amp) | 4.0 |
| UNIPOLAR CURRENT | (Amp) | |
| RESISTANCE | (Ohm) | 0.52 |
| INDUCTANCE | (mH) | 2.4 |
| BIPOLAR HOLDING TORQUE | (Ncm) | 235 |
| ROTOR INERTIA | (Kgm $^2$ x 10 $^{-7}$) | 500 |
| THEORETICAL ACCELERATION | (rad x sec.$^{-2}$) | 47000 |
| BACK E.M.F. | (V/Krpm) | 58.7 |
| MASS | (Kg) | 1.1 |
| INTERNATIONAL STANDARDS | | UL, CSA |
| PROTECTION DEGREE | | IP40 |
| LEADS CODE | | V |

Codes between brackets refer to double shaft models.

## TORQUE/SPEED CURVE

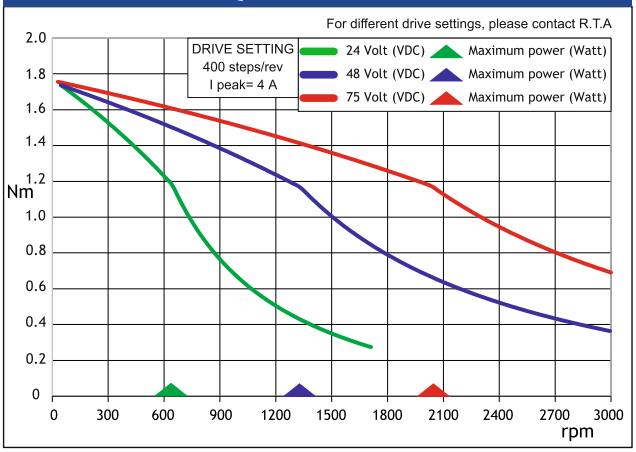


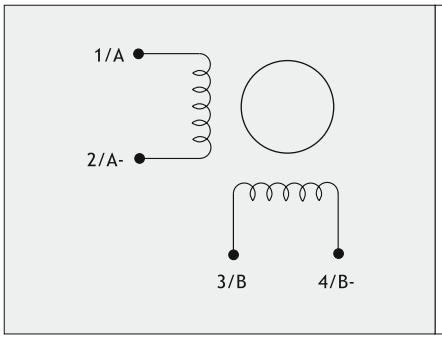


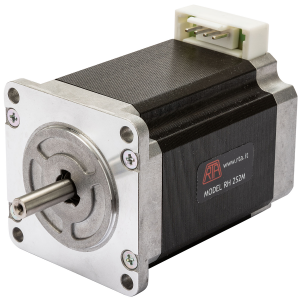

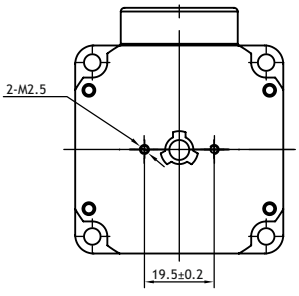


DOUBLE SHAFT MOTORS ONLY.

## Suggested R.T.A. drive series: BSD, CSD, FLEX-DRIVE, NDC

# RH 2S1M-0XX0

## Dimensions (Unit:mm)

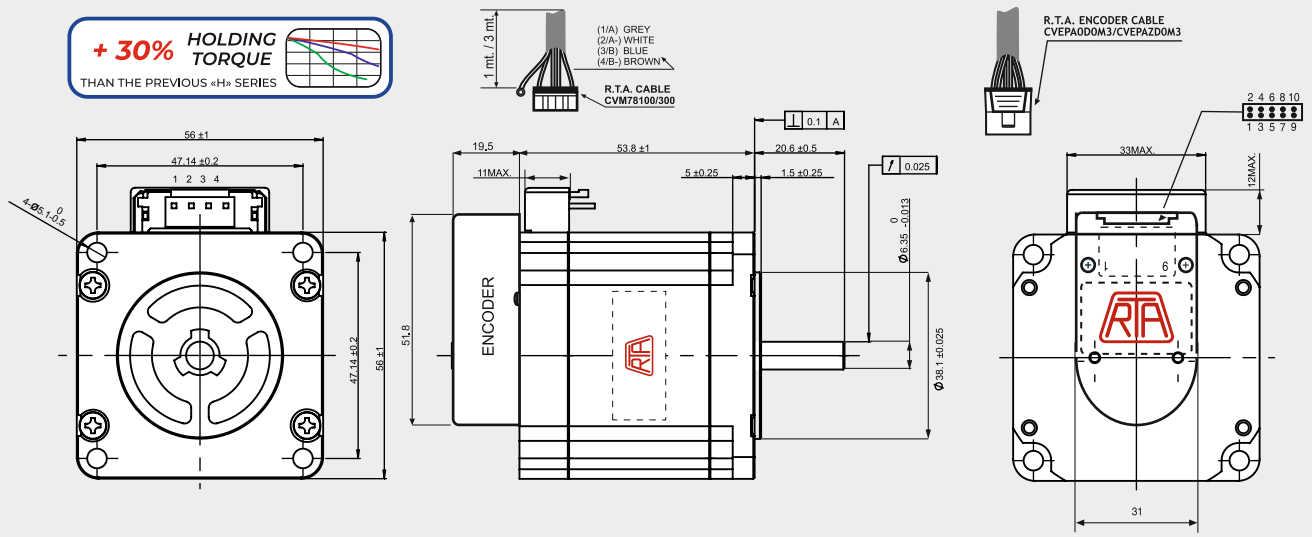


| ENCODER OPTIONS: | | RH 2S1M-04D0 | RH 2S1M-04E0 | RH 2S1M-0HE0 |
|---|---|---|---|---|
| RESOLUTION | | 400 cpr | 400 cpr | 4000 cpr |
| INDEX | | No | Yes | Yes |
| CURRENT CONSUMPTION | (mA) | 50 | 50 | 85 |
| HIGH LEVEL OUTPUT | (Volt) | 5 (TIP) - 4.75 (MIN) ($I_{MAX}$=25mA) | 3.4 (TIP) - 2.4 (MIN) ($I_{MAX}$=20mA) | 3.4 (TIP) - 2.4 (MIN) ($I_{MAX}$=20mA) |
| LOW LEVEL OUTPUT | (Volt) | 0.25 (TIP) - 0.6 (MAX) ($I_{MAX}$=25mA) | 0.2 (TIP) - 0.4 (MAX) ($I_{MAX}$=20mA) | 0.2 (TIP) - 0.4 (MAX) ($I_{MAX}$=20mA) |
| OUTPUT SIGNAL | | Differential | Differential | Differential |
| MAXIMUM FREQUENCY | (KHz) | 100 | 100 | 720 |
| POWER SUPPLY VOLTAGE | (Volt) | 5 $V_{DC}$ ± 10% | 5 $V_{DC}$ ± 10% | 5 $V_{DC}$ ± 10% |

ENCODER NEEDS CVEPA0D0M3 OR CVEPAZD0M3 R.T.A. CABLE. CONTACT R.T.A. FOR FURTHER DETAILS

| FEATURES | | |
|---|---|---|
| **MODEL** | | **RH 2S1M-0XX0** |
| BASIC STEP ANGLE | | 1.8 ± 0.09° |
| BIPOLAR CURRENT | (Amp) | 4.0 |
| UNIPOLAR CURRENT | (Amp) | |
| RESISTANCE | (Ohm) | 0.37 |
| INDUCTANCE | (mH) | 1.5 |
| BIPOLAR HOLDING TORQUE | (Ncm) | 140 |
| UNIPOLAR HOLDING TORQUE | (Ncm) | |
| ROTOR INERTIA | (Kgm $^2$ x 10 $^{-7}$) | 280 |
| THEORETICAL ACCELERATION | (rad x sec.$^{-2}$) | 50000 |
| BACK E.M.F. | (V/Krpm) | 35 |
| MASS | (Kg) | 0 69 |
| PROTECTION DEGREE | | IP40 |
| LEADS CODE | | V |

### TORQUE SPEED/CURVE

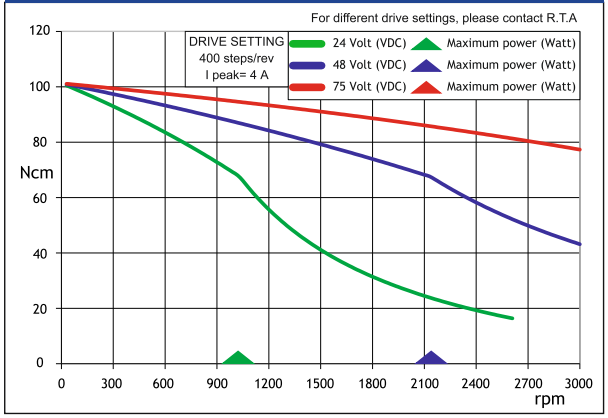


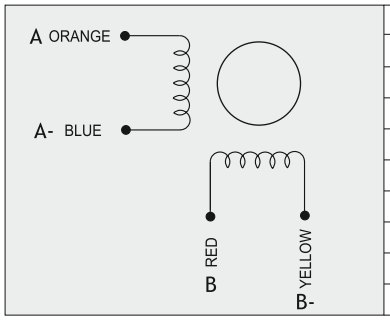


### ENCODER PIN-OUT

| DESCRIPTION | 04D0 PINS | 04E0 PINS | 0HE0 PINS | R.T.A. CABLE LEADS COLOR |
|---|---|---|---|---|
| CHANNEL A+ | 6 | 6 | 6 | GREEN |
| CHANNEL A- | 5 | 5 | 5 | PURPLE |
| CHANNEL B+ | 8 | 8 | 8 | BLUE |
| CHANNEL B- | 7 | 7 | 7 | BROWN |
| + DC (5V) | 2 | 2 | 2 | RED |
| GROUND | 3 | 3 | 3 | BLACK |
| INDEX+ | / | 10 | 10 | ORANGE |
| INDEX- | / | 9 | 9 | WHITE |

## Suggested R.T.A. drive series: BSD, CSD, FLEX-DRIVE, NDC

# RH 2S2M-0XX0

## Dimensions (Unit:mm)

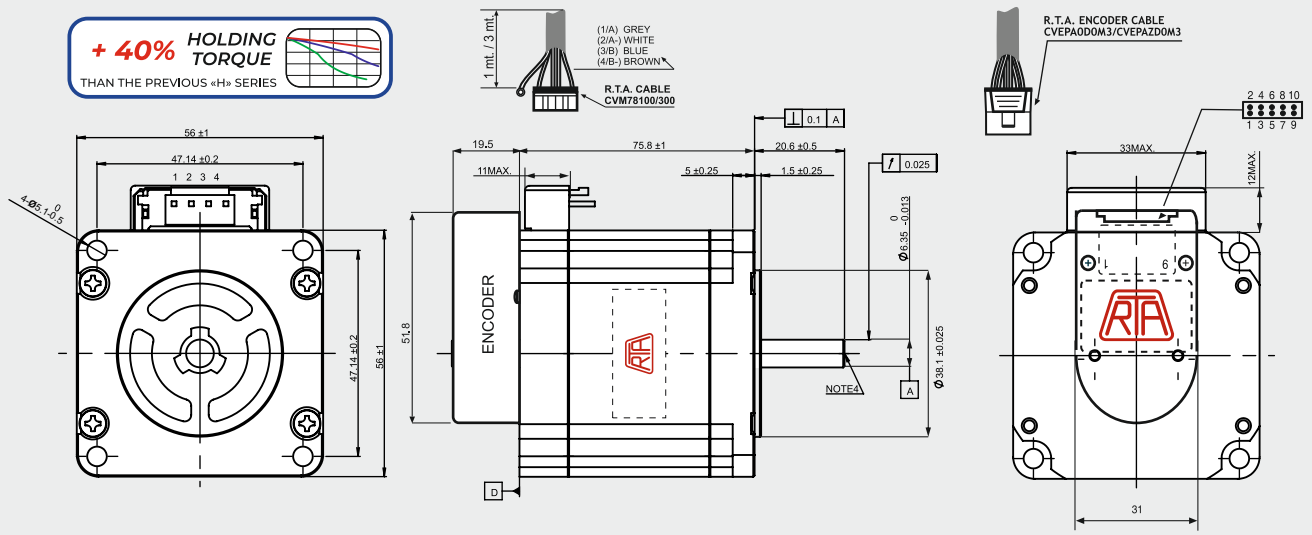


| ENCODER OPTIONS: | | RH 2S2M-04D0 | RH 2S2M-04E0 | RH 2S2M-0HE0 |
|---|---|---|---|---|
| RESOLUTION | | 400 cpr | 400 cpr | 4000 cpr |
| INDEX | | No | Yes | Yes |
| CURRENT CONSUMPTION | (mA) | 50 | 50 | 85 |
| HIGH LEVEL OUTPUT | (Volt) | 5 (TIP) - 4.75 (MIN) ($I_{MAX}$=25mA) | 3.4 (TIP) - 2.4 (MIN) ($I_{MAX}$=20mA) | 3.4 (TIP) - 2.4 (MIN) ($I_{MAX}$=20mA) |
| LOW LEVEL OUTPUT | (Volt) | 0.25 (TIP) - 0.6 (MAX) ($I_{MAX}$=25mA) | 0.2 (TIP) - 0.4 (MAX) ($I_{MAX}$=20mA) | 0.2 (TIP) - 0.4 (MAX) ($I_{MAX}$=20mA) |
| OUTPUT SIGNAL | | Differential | Differential | Differential |
| MAXIMUM FREQUENCY | (KHz) | 100 | 100 | 720 |
| POWER SUPPLY VOLTAGE | (Volt) | 5 $V_{DC}$ ± 10% | 5 $V_{DC}$ ± 10% | 5 $V_{DC}$ ± 10% |

ENCODER NEEDS CVEPA0D0M3 OR CVEPAZD0M3 R.T.A. CABLE. CONTACT R.T.A. FOR FURTHER DETAILS

| FEATURES | | |
|---|---|---|
| **MODEL** | | **RH 2S2M-0XX0** |
| BASIC STEP ANGLE | | 1.8 ± 0.09° |
| BIPOLAR CURRENT | (Amp) | 4.0 |
| UNIPOLAR CURRENT | (Amp) | |
| RESISTANCE | (Ohm) | 0.52 |
| INDUCTANCE | (mH) | 2.4 |
| BIPOLAR HOLDING TORQUE | (Ncm) | 235 |
| UNIPOLAR HOLDING TORQUE | (Ncm) | |
| ROTOR INERTIA | (Kgm $^2$ x 10 $^{-7}$) | 500 |
| THEORETICAL ACCELERATION | (rad x sec.$^{-2}$) | 47000 |
| BACK E.M.F. | (V/Krpm) | 58.7 |
| MASS | (Kg) | 1.1 |
| PROTECTION DEGREE | | IP40 |
| LEADS CODE | | V |

### TORQUE SPEED/CURVE

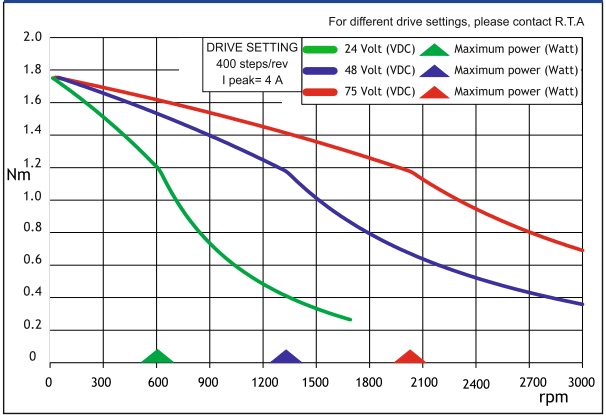


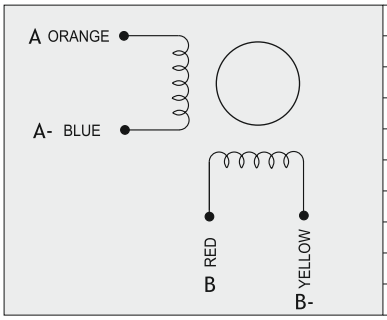


| ENCODER PIN-OUT | | | | |
|---|---|---|---|---|
| DESCRIPTION | 04D0 PINS | 04E0 PINS | 0HE0 PINS | R.T.A. CABLE LEADS COLOR |
| CHANNEL A+ | 6 | 6 | 6 | GREEN |
| CHANNEL A- | 5 | 5 | 5 | PURPLE |
| CHANNEL B+ | 8 | 8 | 8 | BLUE |
| CHANNEL B- | 7 | 7 | 7 | BROWN |
| + DC (5V) | 2 | 2 | 2 | RED |
| GROUND | 3 | 3 | 3 | BLACK |
| INDEX+ | / | 10 | 10 | ORANGE |
| INDEX- | / | 9 | 9 | WHITE |

## Suggested R.T.A. drive series: BSD, CSD, FLEX-DRIVE, NDC

# RM 3T1M-00HT

NEW!

BATTERY-LESS
ABSOLUTE ENCODER

## Dimensions (Unit:mm)

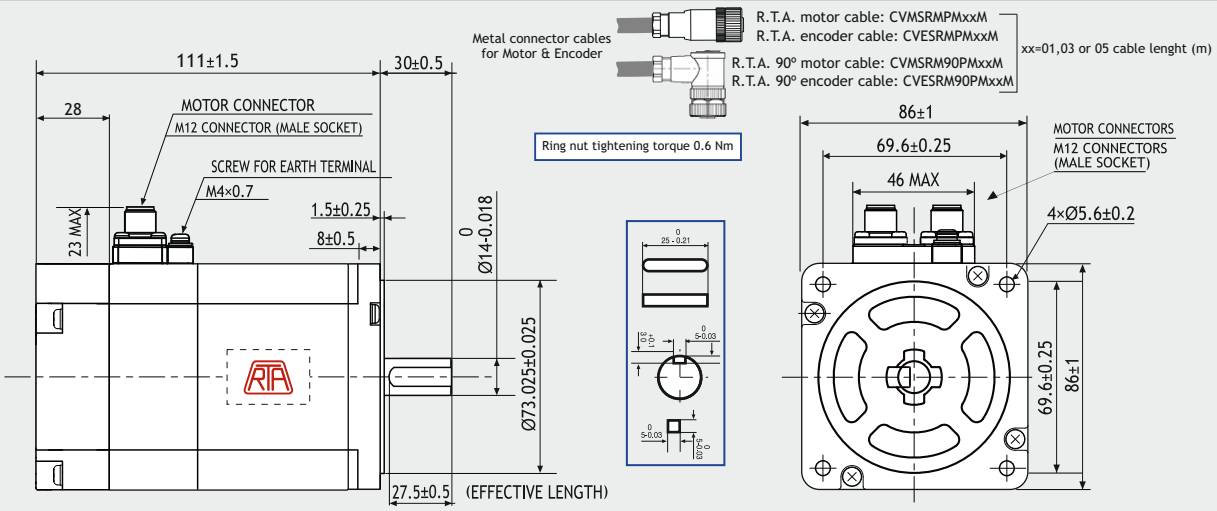


## ENCODER FEATURES:

| ENCODER MOTOR | | RM 3T3M-00HT |
|---|---|---|
| | | |
| RESOLUTION | | DRIVE RELATED |
| MULTI-TURN RESOLUTION | | $2^{16}$ |
| CURRENT CONSUMPTION | (mA) | 60 |
| HIGH LEVEL OUTPUT | (Volt) | 5 (TIP) - 4.75 (MIN) |
| LOW LEVEL OUTPUT | (Volt) | 0.25 (TIP) - 0.6 (MAX) |
| OUTPUT SIGNAL | | BiSS-C/SSI |
| POWER SUPPLY VOLTAGE | (Volt) | 5 $V_{DC}$ ± 10% |

## ENCODER CONNECTOR PIN-OUT

| DESCRIPTION | X-PLUS AS4 C4 CON. PINS | M12 MOTOR PINS | RTA CABLE LEADS COLOR |
|---|---|---|---|
| CLOCK + | 47 | 1 | BLUE |
| CLOCK - | 46 | 2 | BROWN |
| DATA + | 45 | 3 | GREEN |
| DATA - | 44 | 4 | PURPLE |
| GND | 48 | 5 | BLACK |
| RESET | 42 | 6 | WHITE |
| NC | 43 | 7 | ORANGE |
| + 5 VDC | 41 | 8 | RED |

## MOTOR FEATURES:

| MODEL | | RM 3T1M |
|---|---|---|
| BASIC STEP ANGLE | | 1.8 ± 0.09° |
| BIPOLAR CURRENT | (A) | 4 |
| RESISTANCE | (Ohm) | 0.56 |
| INDUCTANCE | (mH) | 3.7 |
| BIPOLAR HOLDING TORQUE | (Ncm) | 360 |
| ROTOR INERTIA | (Kgm $^2$ x 10 $^{-7}$) | 1480 |
| THEORETICAL ACCELERATION | (rad x sec.$^{-2}$) | 24300 |
| BACK E.M.F. | (V/Krpm) | 90 |
| MASS | (Kg) | 1.95 |
| INTERNATIONAL STANDARDS | | UL, CSA, CE, RoHS |
| INSULATION VOLTAGE | (V) | 250 $V_{AC}$ (350 $V_{DC}$) |
| PROTECTION DEGREE - INSULATION CLASS | | IP 54 - CLASS F |
| LEADS CODE | | V |

## TORQUE/SPEED CURVE

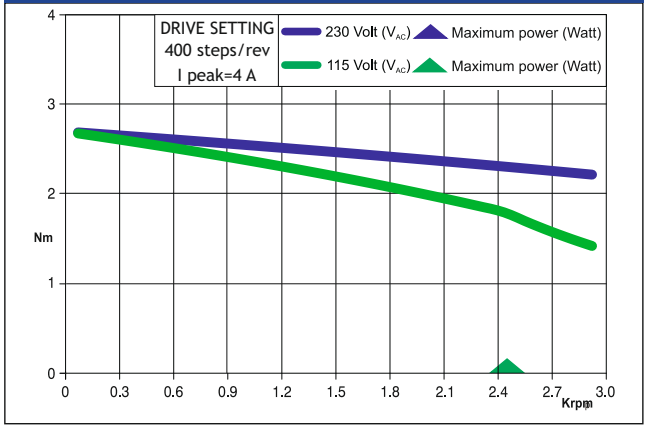


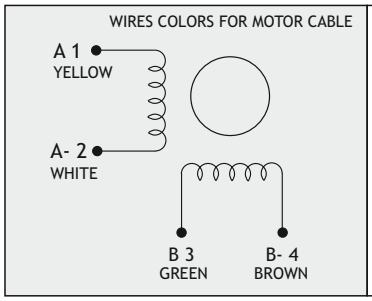


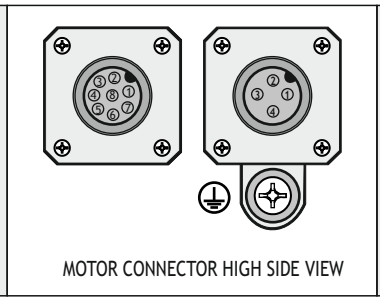


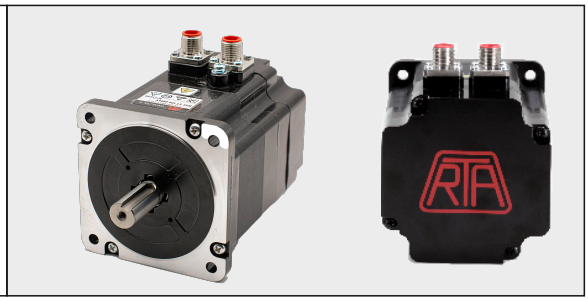

Only for R.T.A. 230 Vac X-PLUS AS4 drive



R.T.A. s.r.l. PAVIA (ITALY) SANYO DENKI CO.,Ltd (JAPAN)

# RM 3T2M-00HT

NEW!

BATTERY-LESS
ABSOLUTE ENCODER

## Dimensions (Unit:mm)

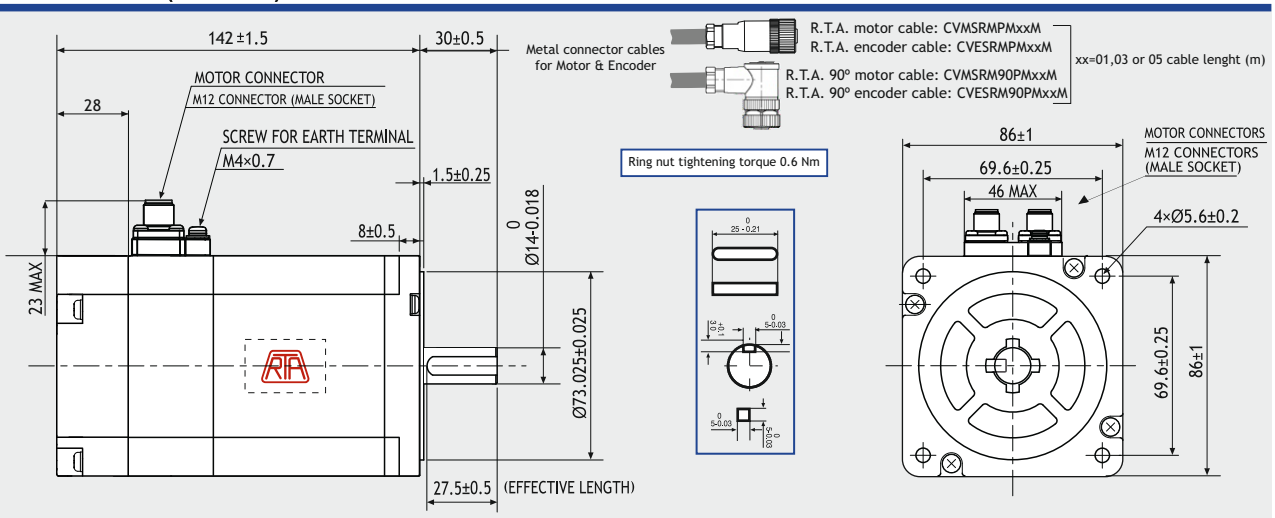


## ENCODER FEATURES:

| ENCODER MOTOR | | RM 3T3M-00HT |
|---|---|---|
| | | |
| RESOLUTION | | DRIVE RELATED |
| MULTI-TURN RESOLUTION | | $2^{16}$ |
| CURRENT CONSUMPTION | (mA) | 60 |
| HIGH LEVEL OUTPUT | (Volt) | **5 (TIP) - 4.75 (MIN)** |
| LOW LEVEL OUTPUT | (Volt) | **0.25 (TIP) - 0.6 (MAX)** |
| OUTPUT SIGNAL | | BiSS-C/SSI |
| POWER SUPPLY VOLTAGE | (Volt) | 5 $V_{DC}$ ± 10% |

## ENCODER CONNECTOR PIN-OUT

| DESCRIPTION | X-PLUS AS4 C4 CON. PINS | M12 MOTOR PINS | RTA CABLE LEADS COLOR |
|---|---|---|---|
| CLOCK + | 47 | 1 | BLUE |
| CLOCK - | 46 | 2 | BROWN |
| DATA + | 45 | 3 | GREEN |
| DATA - | 44 | 4 | PURPLE |
| GND | 48 | 5 | BLACK |
| RESET | 42 | 6 | WHITE |
| NC | 43 | 7 | ORANGE |
| + 5 VDC | 41 | 8 | RED |

## MOTOR FEATURES:

| MODEL | | RM 3T2M |
|---|---|---|
| BASIC STEP ANGLE | | 1.8 ± 0.09° |
| BIPOLAR CURRENT | (A) | 4 |
| RESISTANCE | (Ohm) | 0.83 |
| INDUCTANCE | (mH) | 6.4 |
| BIPOLAR HOLDING TORQUE | (Ncm) | 700 |
| ROTOR INERTIA | (Kgm $^2$ x 10 $^{-7}$) | 3000 |
| THEORETICAL ACCELERATION | (rad x sec.$^{-2}$) | 23330 |
| BACK E.M.F. | (V/Krpm) | 175 |
| MASS | (Kg) | 3.1 |
| INTERNATIONAL STANDARDS | | UL, CSA, CE, RoHS |
| INSULATION VOLTAGE | (V) | 250 $V_{AC}$ (350 $V_{DC}$) |
| PROTECTION DEGREE - INSULATION CLASS | | IP 54 - CLASS F |
| LEADS CODE | | V |

## TORQUE/SPEED CURVE

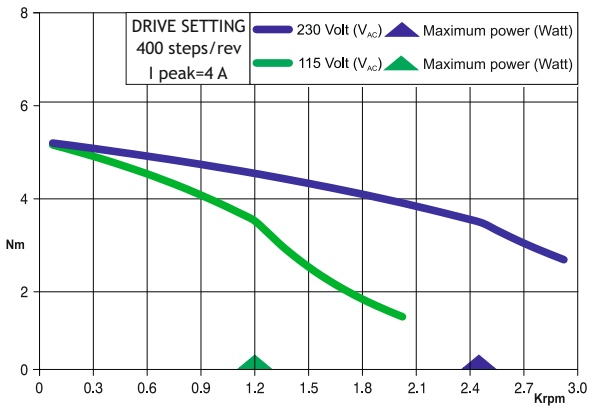


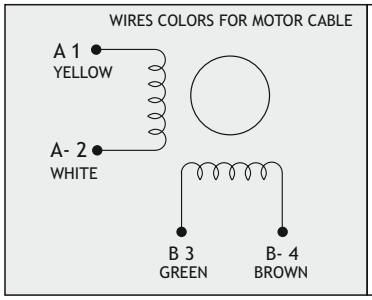


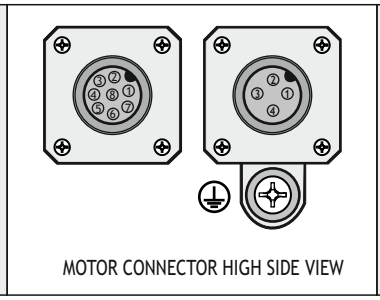


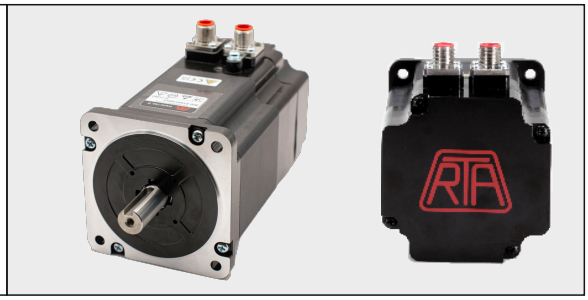

## Only for R.T.A. 230 Vac X-PLUS AS4 drive



R.T.A. s.r.l. PAVIA (ITALY) SANYO DENKI CO.,Ltd (JAPAN)

# RM 3T3M-00HT

NEW!

BATTERY-LESS
ABSOLUTE ENCODER

## Dimensions (Unit:mm)

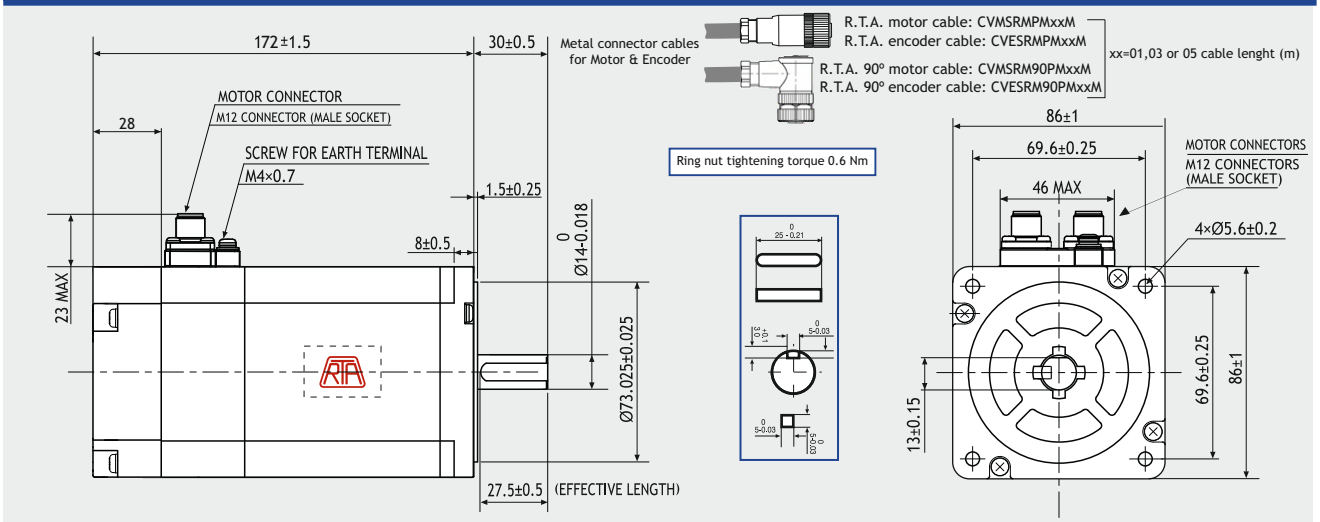


## ENCODER FEATURES:

| ENCODER MOTOR | | RM 3T3M-00HT |
|---|---|---|
| | | |
| RESOLUTION | | DRIVE RELATED |
| MULTI-TURN RESOLUTION | | $2^{16}$ |
| CURRENT CONSUMPTION | (mA) | 60 |
| HIGH LEVEL OUTPUT | (Volt) | **5 (TIP) - 4.75 (MIN)** |
| LOW LEVEL OUTPUT | (Volt) | **0.25 (TIP) - 0.6 (MAX)** |
| OUTPUT SIGNAL | | BiSS-C/SSI |
| POWER SUPPLY VOLTAGE | (Volt) | 5 $V_{DC}$ ± 10% |

## ENCODER CONNECTOR PIN-OUT

| DESCRIPTION | X-PLUS AS4 C4 CON. PINS | M12 MOTOR PINS | RTA CABLE LEADS COLOR |
|---|---|---|---|
| CLOCK + | 47 | 1 | BLUE |
| CLOCK - | 46 | 2 | BROWN |
| DATA + | 45 | 3 | GREEN |
| DATA - | 44 | 4 | PURPLE |
| GND | 48 | 5 | BLACK |
| RESET | 42 | 6 | WHITE |
| NC | 43 | 7 | ORANGE |
| + 5 VDC | 41 | 8 | RED |

## MOTOR FEATURES:

| MODEL | | RM 3T3M |
|---|---|---|
| BASIC STEP ANGLE | | 1.8 ± 0.09° |
| BIPOLAR CURRENT | (A) | 4 |
| RESISTANCE | (Ohm) | 1 |
| INDUCTANCE | (mH) | 7.9 |
| BIPOLAR HOLDING TORQUE | (Ncm) | 920 |
| ROTOR INERTIA | (Kgm $^2$ x 10 $^{-7}$) | 4500 |
| THEORETICAL ACCELERATION | (rad x sec.$^{-2}$) | 20500 |
| BACK E.M.F. | (V/Krpm) | 241 |
| MASS | (Kg) | 4.2 |
| INTERNATIONAL STANDARDS | | UL, CSA, CE, RoHS |
| INSULATION VOLTAGE | (V) | 250 $V_{AC}$ (350 $V_{DC}$) |
| PROTECTION DEGREE - INSULATION CLASS | | IP 54 - CLASS F |
| LEADS CODE | | V |

## TORQUE/SPEED CURVE

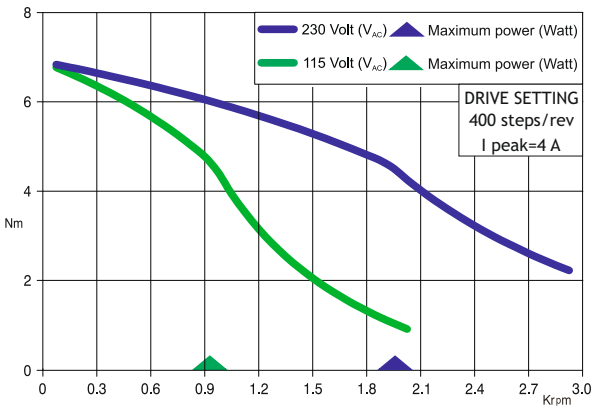


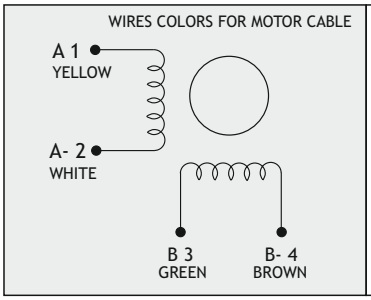


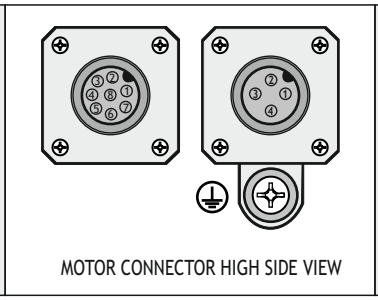




**Only for R.T.A. 230 Vac X-PLUS AS4 drive**



R.T.A. s.r.l. PAVIA (ITALY) SANYO DENKI CO.,Ltd (JAPAN)

# EM 6H1M-0XX0

## Dimensions (Unit:mm)

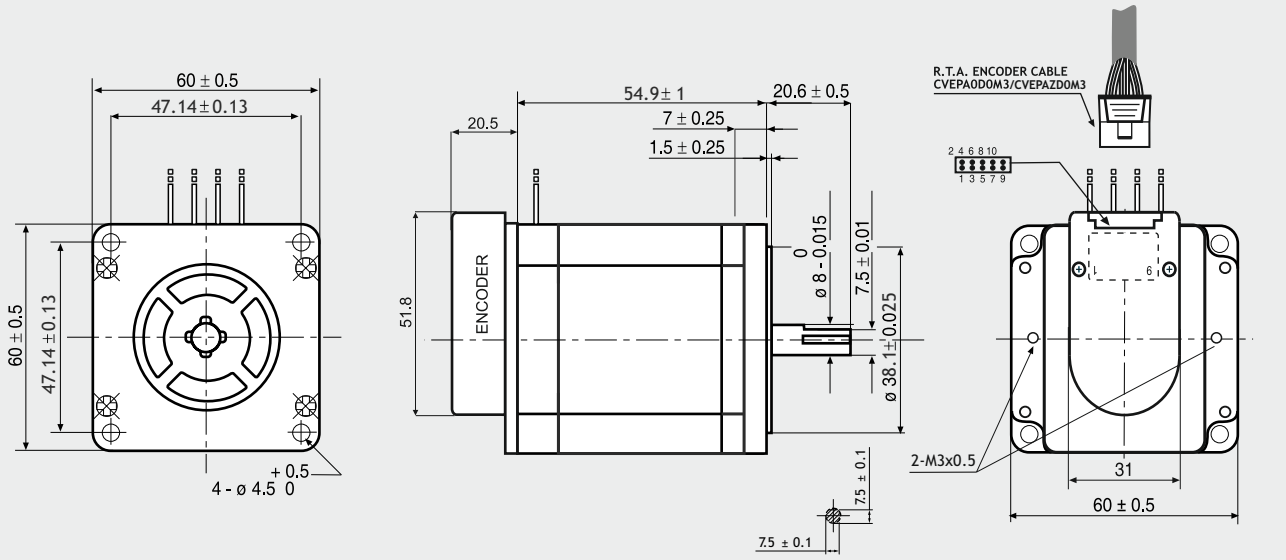


## SANYO DENKI MOTOR FEATURES

| MODEL | | EM 6H1M-0XX0 |
|---|---|---|
| SANYO DENKI MOTOR CODE | | 103-H7822-1731 |
| BASIC STEP ANGLE | | 1.8° ± 0.09° |
| BIPOLAR PARALLEL CURRENT | (A) | 4.0 |
| RESISTANCE | (Ohm) | 0.43 |
| INDUCTANCE | (mH) | 1.38 |
| BIPOLAR HOLDING TORQUE | (Ncm) | 137 |
| ROTOR INERTIA | ($Kgm^2 \times 10^{-7}$) | 400 |
| THEORETICAL ACCELERATION | (rad × $sec.^{-2}$) | 34200 |
| BACK E.M.F. | (V/Krpm) | 43 |
| MASS | (Kg) | 1.3 |
| LEADS CODE | | V |

## TORQUE/SPEED CURVE

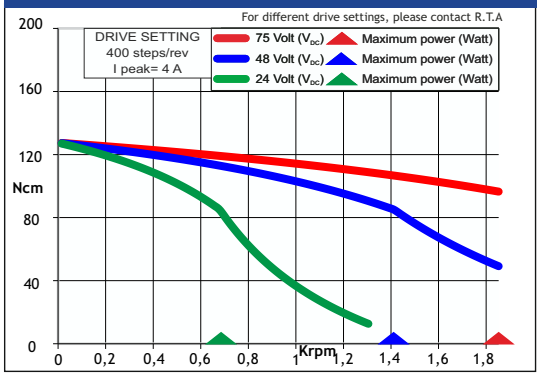


R.T.A. s.r.l. PAVIA (ITALY) SANYO DENKI CO.,Ltd (JAPAN)

| ENCODER OPTIONS: | | EM 6H1M-04D0 | EM 6H1M-04E0 | EM 6H1M-0HE0 |
|---|---|---|---|---|
| RESOLUTION | | 400 cpr | 400 cpr | 4000 cpr |
| INDEX | | No | Yes | Yes |
| CURRENT CONSUMPTION | (mA) | 50 | 50 | 85 |
| HIGH LEVEL OUTPUT | (Volt) | 5 (TIP) - 4.75 (MIN) ($I_{MAX}$=25mA) | 3.4 (TIP) - 2.4 (MIN) ($I_{MAX}$=20mA) | 3.4 (TIP) - 2.4 (MIN) ($I_{MAX}$=20mA) |
| LOW LEVEL OUTPUT | (Volt) | 0.25 (TIP) - 0.6 (MAX) ($I_{MAX}$=25mA) | 0.2 (TIP) - 0.4 (MAX) ($I_{MAX}$=20mA) | 0.2 (TIP) - 0.4 (MAX) ($I_{MAX}$=20mA) |
| OUTPUT SIGNAL | | Differential | Differential | Differential |
| MAXIMUM FREQUENCY | (KHz) | 100 | 100 | 720 |
| POWER SUPPLY VOLTAGE | (Volt) | 5 $V_{DC}$ ± 10% | 5 $V_{DC}$ ± 10% | 5 $V_{DC}$ ± 10% |

ENCODER NEEDS CVEPA0D0M3 OR CVEPAZD0M3 R.T.A. CABLE. CONTACT R.T.A. FOR FURTHER DETAILS

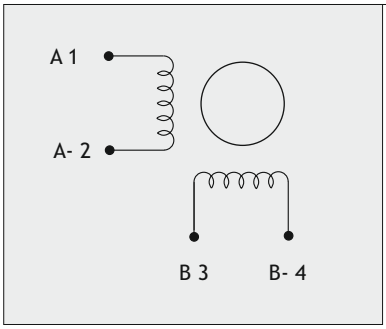


### ENCODER PIN-OUT

| DESCRIPTION | 04D0 PINS | 04E0 PINS | 0HE0 PINS | R.T.A. CABLE LEADS COLOR |
|---|---|---|---|---|
| CHANNEL A+ | 6 | 6 | 6 | GREEN |
| CHANNEL A- | 5 | 5 | 5 | PURPLE |
| CHANNEL B+ | 8 | 8 | 8 | BLUE |
| CHANNEL B- | 7 | 7 | 7 | BROWN |
| + DC (5V) | 2 | 2 | 2 | RED |
| GROUND | 3 | 3 | 3 | BLACK |
| INDEX+ | / | 10 | 10 | ORANGE |
| INDEX- | / | 9 | 9 | WHITE |
| R.T.A. CABLE | CVEPA0D0M3 | CVEPAZD03M | CVEPAZD03M | |

## Suggested R.T.A. drive series: BSD, CSD, NDC, ADW, FLEX-DRIVE

STEPPING MOTORS ACCESSORIES

# FRONT BRAKES

# FB-M12-17-02-00000

## FRONT BRAKES

M12 CONNECTOR

24 VDC

NEMA 17




*SCAN THE QR CODE TO WATCH A VIDEO ON FB SERIES FRONT BRAKES*

## Dimensions (Units:mm)

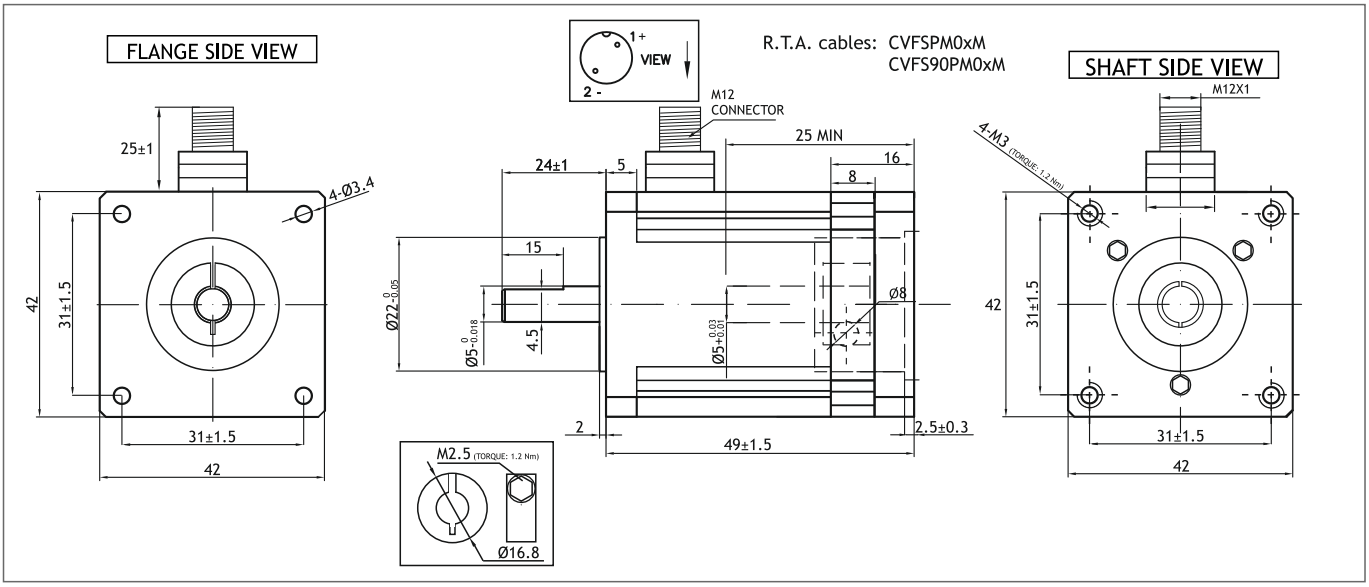


| MODEL | Static torque (Nm) | Current (mA) | Voltage (V) | Power (W) | Mass (Kg) |
|---|---|---|---|---|---|
| **FB-M12-17-02-00000** | 0.2 | 170 | 24 VDC | 4.1 | 0.27 |

## Suggested motors and cables

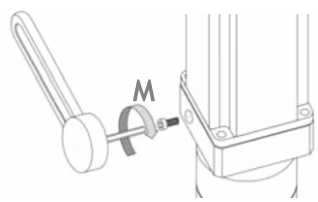


NEMA 17 motors



R.T.A. cables




CVFSPM0xM x=1m/3m



CVFS90PM0xM x=1m/3m

MOUNTING OPERATION MODE: ■ Tightening torque M= 1.2 Nm ■ Locking bolt M5 ■ R.T.A. Quality Control

**CAUTION**

**Use for safety related functions is forbidden (EN 60204-1). Moreover, when the application arrangement is in such way that a brake fault or failure could generate a risk for property or human life, external independent safety protection system must be provided in the machine.**

# FB-M12-23-08-00000

## FRONT BRAKES

M12 CONNECTOR

24 VDC

NEMA 23




*SCAN THE QR CODE TO WATCH A VIDEO ON FB SERIES FRONT BRAKES*

## Dimensions (Units:mm)

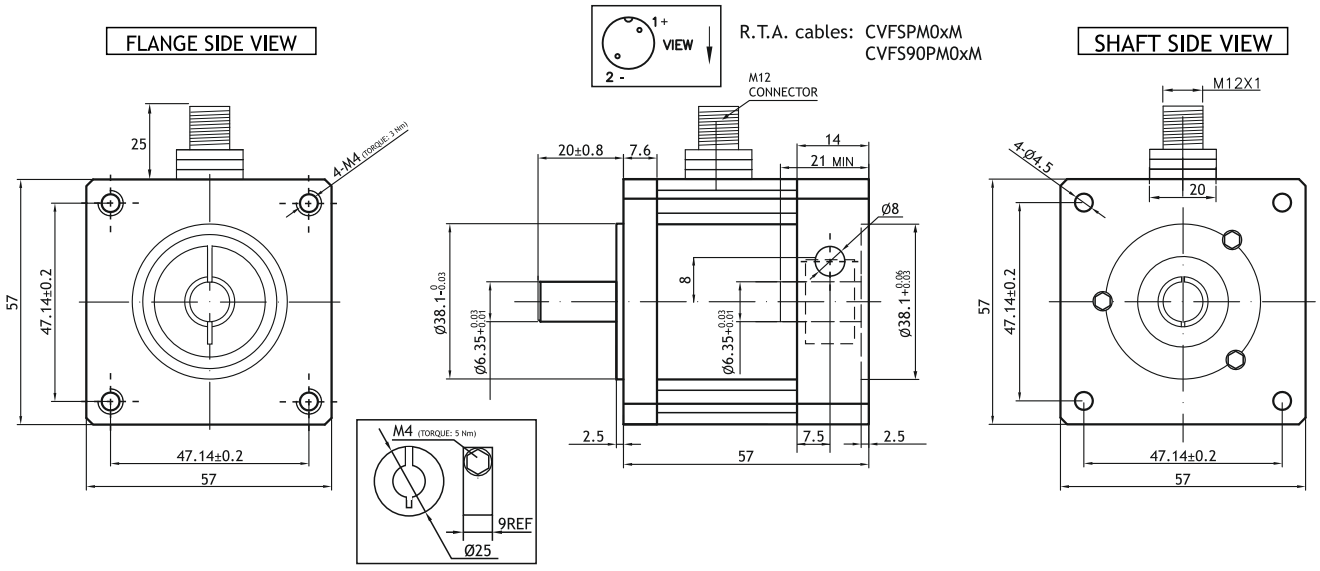


| MODEL | Static torque (Nm) | Current (mA) | Voltage (V) | Power (W) | Mass (Kg) |
|---|---|---|---|---|---|
| **FB-M12-23-08-00000** | 0.8 | 340 | 24 VDC | 8.1 | 0.63 |

## Suggested motors and cables

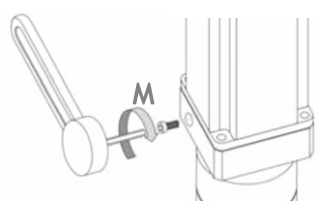


NEMA 23 motors

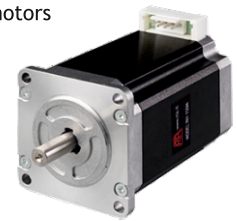

R.T.A. cables



Shield
Red +
Yellow -

CVFSPM0xM x=1m/3m



CVFS90PM0xM x=1m/3m

MOUNTING OPERATION MODE: ■ Tightening torque M= 5 Nm ■ Locking bolt M4 ■ R.T.A. Quality Control

**CAUTION**

**Use for safety related functions is forbidden (EN 60204-1). Moreover, when the application arrangement is in such way that a brake fault or failure could generate a risk for property or human life, external independent safety protection system must be provided in the machine.**



# SERVO SYSTEMS

SANMOTION G
AC SERVO SYSTEMS

EtherCAT®

SIL3
SAFE TORQUE OFF (STO)

c UL us

7th gen

# 230 VAC G SERVOAMPLIFIERS

## EtherCAT INTERFACE

FIVE DIGIT DISPLAY: It allows to monitor in real time the amplifier status

Fast Plug-in connector

PC CONNECTOR: The amplifier can be set and monitored by SanMotion motor setup and a Personal Computer USB 3.0 interface

POWER CONNECTION: 230 VAC, single-phase / three-phase;
Built-in protection circuits against overload and input overvoltage

EtherCAT INTERFACE CONNECTOR: RJ45 - CAT5e

Regenerative internal resistor or external regenerative resistor (optional);
Regenerative resistor and logic power supply connector

I/O CONNECTOR: 7 inputs and 2 outputs
Encoder output repetition connector NEW!

SAFE TORQUE OFF - SIL3 Pl=e CONNECTOR SIL3

MOTOR POWER CONNECTOR (U-V-W phases)

ENCODER CONNECTOR (X3)

SECOND ENCODER CONNECTOR (X4) for external linear scale to avoid backlash

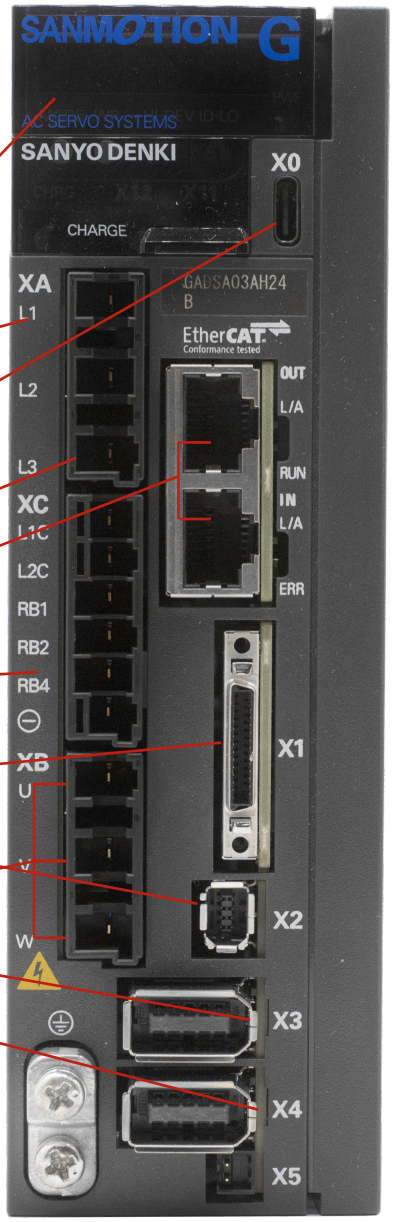


Model GADSA03AH24
Dimensions: (50x160x130)

## MAIN FEATURES

- Safe Torque Off (STO) function - SIL3 [Performance Level - PL = E]
- Mode of Operations: Homing Mode, Profile Velocity Mode, Profile Position Mode, Profile Torque Mode, Cycle Sync Position Mode, Cycle Sync Velocity Mode, Cycle Sync Torque Mode
- One single amplifier size covers from 100 W to 1.5 kW motors
- XML file available
- Speed frequency response of 3.5 kHz

| TECHNICAL DATA | |
|---|---|
| MODEL | GADSA03AH24 |
| CURRENT CAPACITY | 30 Amp |
| POWER SUPPLY VOLTAGE | Single-phase or three-phase (configurable by the user) 200VAC or 230 VAC (+10%, -15%) 50/60 Hz (± 3 Hz) |
| LOGIC POWER SUPPLY | Single-phase from 200VAC to 230 VAC (+10%, -15%) 50/60 Hz (± 3 Hz) |
| MAX COMPATIBLE MOTOR OUTPUT | 1.5 kW |
| DIMENSIONS (mm) | 50x160x130 |
| Mass (kg) | 0.90 kg |

SANMOTION G AC SERVO SYSTEMS

EtherCAT®

SIL3 SAFE TORQUE OFF (STO)

c UL us

# 200 VAC G SERVOAMPLIFIERS

## G SERIES AC SERVOAMPLIFIERS - EtherCAT INTERFACE

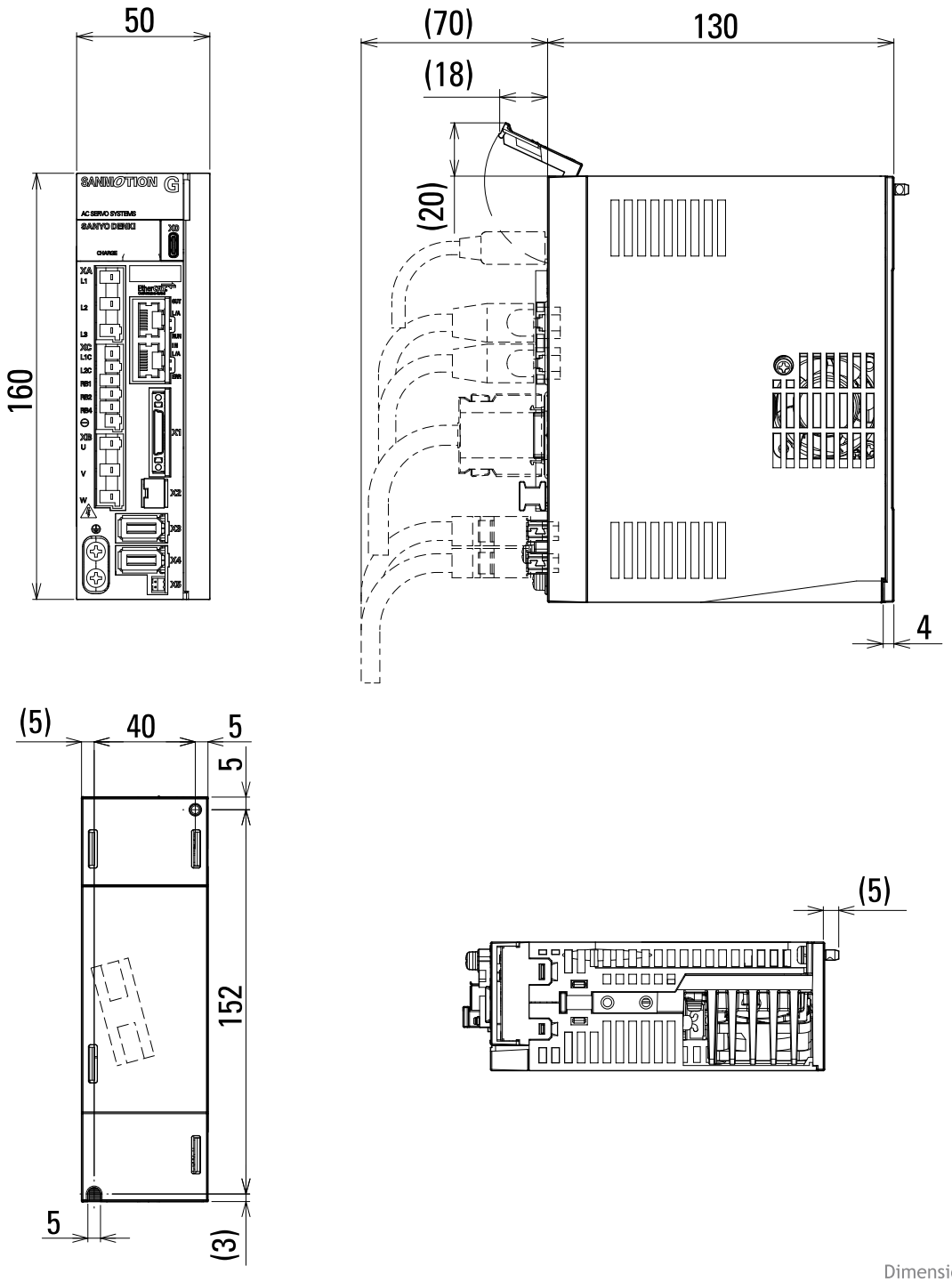


Dimensions mm.

SANMOTION AC SERVO SYSTEMS RS3 | 230 VAC | SIL3 SAFE TORQUE OFF (STO) | EtherCAT

3rd GENERATION!

# 230 VAC SERVOAMPLIFIERS

ADVANCED SAFETY MODULE

## RS3 SERIES AC SERVOAMPLIFIERS - EtherCAT INTERFACE & STO

Dimensions: (60x160x130)
Model RS3A03A2HAE

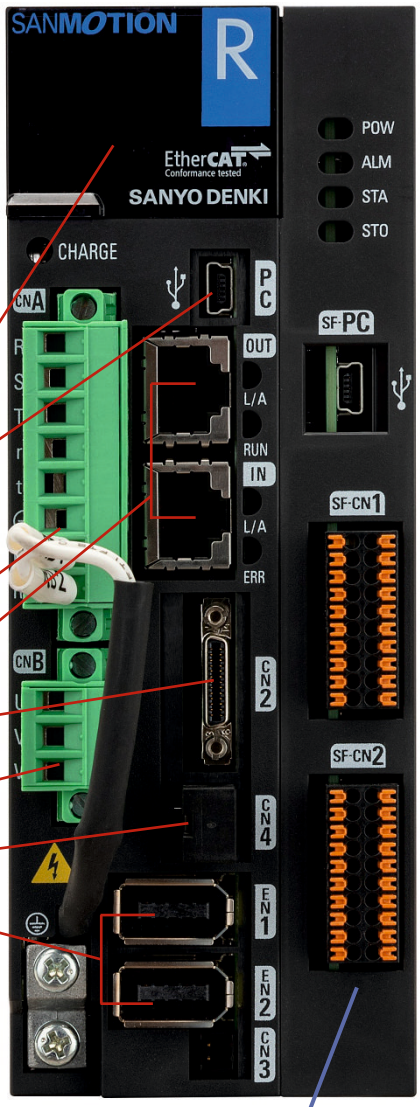


FIVE DIGIT DISPLAY: It allows to monitor amplifier and EtherCAT Network.

PC CONNECTOR: The amplifier can be set and monitored by means of Personal Computer USB interface.

POWER CONNECTOR: 230VAC, single-phase or three-phase (configurable by user). Power sections kept separated for logic/signal and power. Built-in protection circuits against overload and input overvoltage.
**Internal regenerative resistor. External regenerative resistor (optional)**

EtherCAT INTERFACE CONNECTOR: RJ45 - CAT5e.

I/O CONNECTOR: 7 inputs and 2 outputs.

MOTOR POWER CONNECTOR - CONNETTORE POTENZA MOTORE

! SAFE TORQUE OFF SIL3 CONNECTOR

! **SECOND ENCODER CONNECTOR FOR EXTERNAL LINEAR SCALE TO AVOID BACKLASH**

## MAIN FEATURES OF THE 3rd GENERATION

c UL us

- Advanced safety function
- Mode of Operation: Homing Mode, Profile Velocity Mode, Profile Position Mode, Profile Torque Mode, Cycle Sync Position Mode, Cycle Sync Velocity Mode, Cycle Sync Torque Mode.
- Touch Probe Function.
- Speed frequency response of 2.2 kHz [3.3 times that of previous RS1 model!]
- Safe Torque Off (STO) function - SIL3/IEC61508. Performance Level - PL = e/ISO13849-1
- RS3A03A2HAE covers 100W, 200W, 400W, 750W, 1000W, 1500W motors

| SAFETY FUNCTIONS SPECIFICATIONS | |
|---|---|
| STO | SAFE TORQUE OFF |
| SS1 | SAFE STOP 1 |
| SS2 | SAFE STOP 2 |
| SOS | SAFE OPERATING STOP |
| SLS | SAFELY-LIMITED SPEED |
| SBC | SAFE BRAKE CONTROL |
| SSM | SAFE SPEED MONITOR |

| TECHNICAL DATA | EtherCAT Control | | |
|---|---|---|---|
| MODEL | RS3A03A2HAE | RS3A05A2HAE | RS3A10A2HAE |
| MAX CURRENT | 30 Amp | 50 Amp | 100 Amp |
| MOTOR OUTPUT STAGE | IGBT, PWM control, sinusoidal current | | |
| POWER SUPPLY VOLTAGE | Single-phase or three-phase (configurable by the user) 200 VAC or 230 VAC (+10%, -15%) 50/60 Hz (± 3 Hz) | | |
| LOGIC SUPPLY VOLTAGE | Single-phase from 200 VAC to 230 VAC (+10%, -15%) 50/60 Hz (± 3 Hz) | | |
| DIMENSIONS (mm) | 60x160x130 | 105x160x130 | 120x205x220 |
| MASS (kg) | 1.1 | 1.65 | 4.2 |

SANYO DENKI CO.,Ltd (JAPAN)
R.T.A. s.r.l. PAVIA (ITALY)

# "RS3A" SERIES AC SERVOAMPLIFIERS:

## EtherCAT VERSION OUTLINE DRAWINGS

RS3A03A2HAE

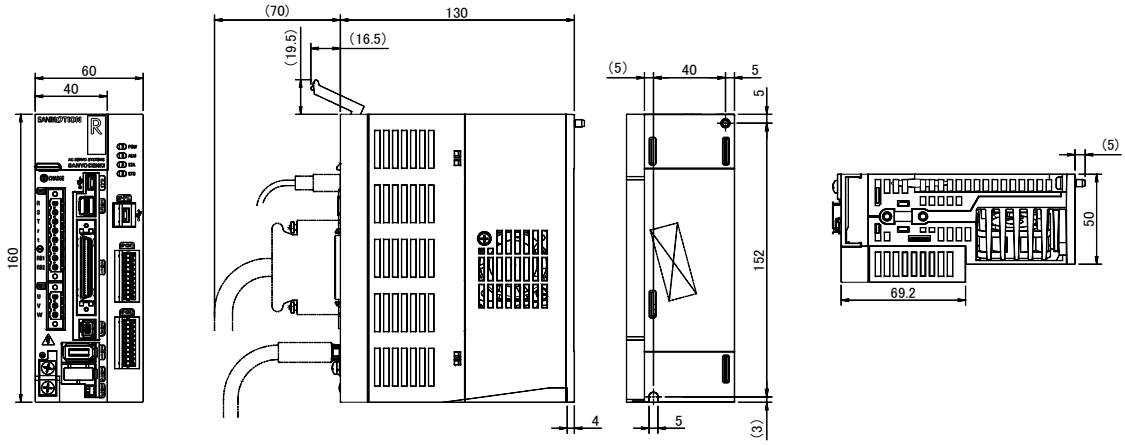


RS3A05A2HAE

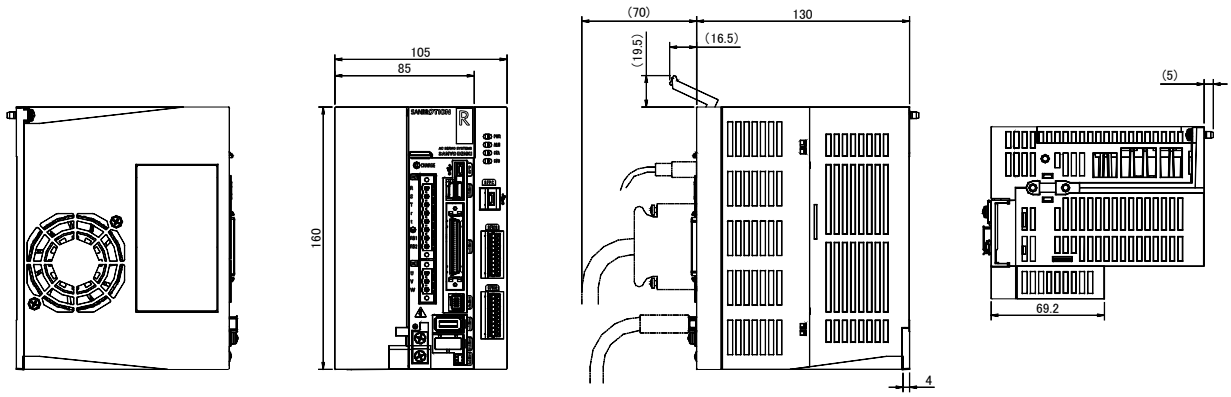


RS3A10A2HAE

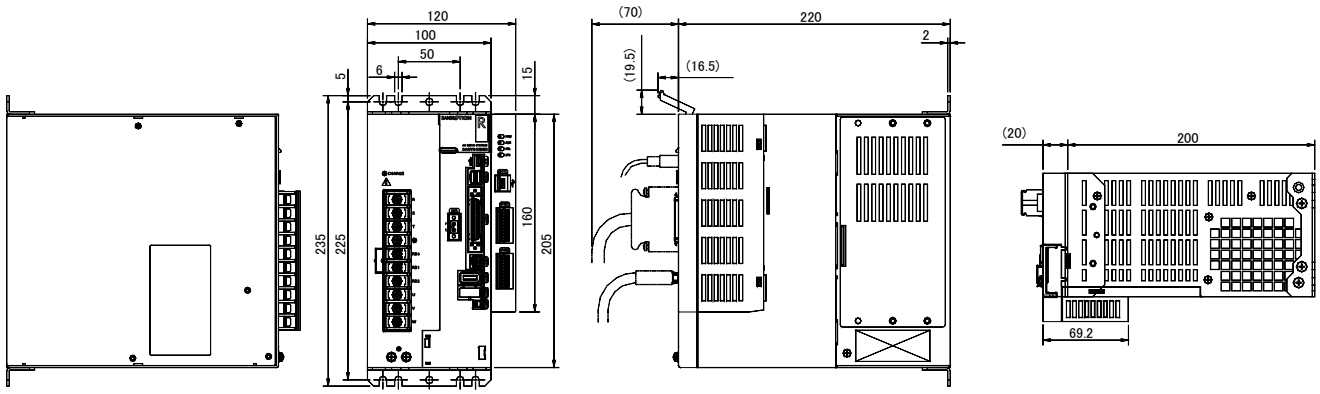


Dimensions mm.

# R2AA13200LXR00M (R2AA13200LCR00M)

## Dimensions (Unit:mm)

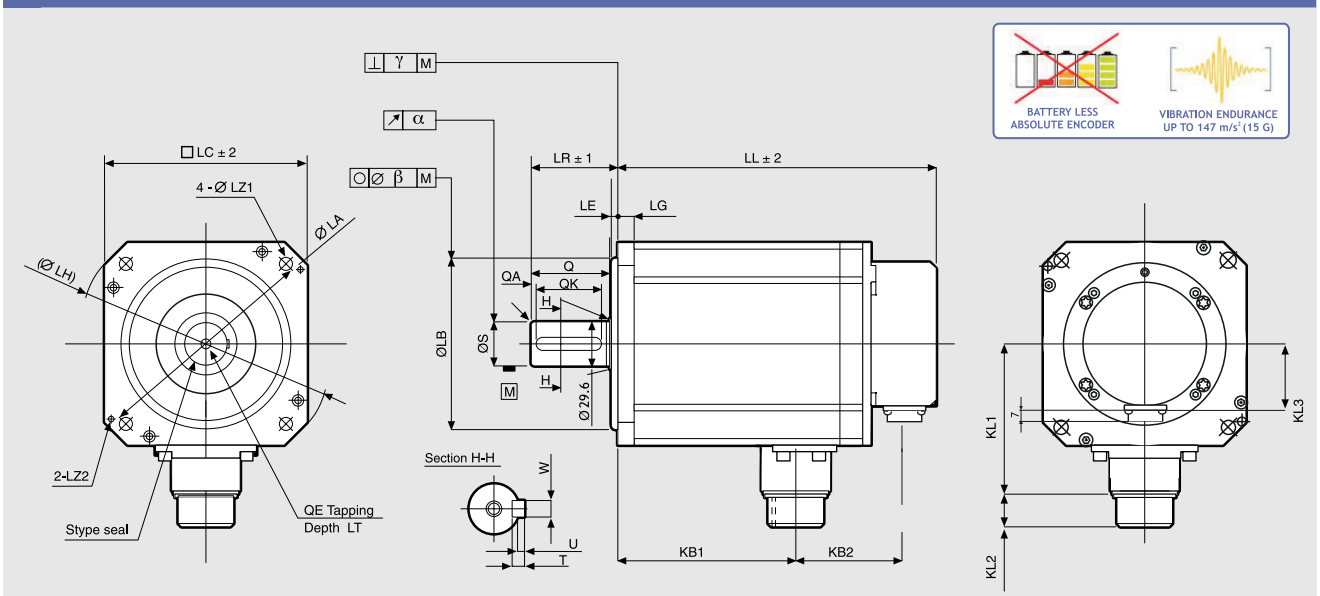


| without brake LL | KB2 | with brake LL | KB2 | KL1 | KL2 | KL3 | LG | LA | LB | LE | LH | LC | LZ1 | LZ2 | LR | S | Q | QA | QK | W | T | U | KB1 | QE | LT |
|---|---|---|---|---|---|---|---|---|---|---|---|---|---|---|---|---|---|---|---|---|---|---|---|---|---|
| 171 | 57 | 216 | 103 | 98 | 21 | 38 | 12 | 145 | 0 110-0.035 | 4 | 165 | 130 | 9 | M6 | 55 | 0 28-0.013 | 50 | 3 | 42 | 0 8-0.036 | 7 | 3 | 99 | M8 | 25 |

## FEATURES

| MODEL | | R1AA13200LXR00M |
|---|---|---|
| NOMINAL POWER | (W) | 2000 |
| NOMINAL SPEED | (rpm) | 2000 |
| MAXIMUM SPEED | (rpm) | 3000 |
| NOMINAL TORQUE | (Nm) | 9.5 |
| STALL TORQUE | (Nm) | 12 |
| MAXIMUM TORQUE | (Nm) | 24 |
| INERTIA | ($Kg*m^2$) | $12.2\times10^{-4}$ |
| ENCODER | (imp./rev) | SINGLE TURN: 131072 imp/rev (17 bit) MULTI TURN: 65536 turns (16 bit) |
| PROTECTION DEGREE | | IP65 |
| WEIGHT | [version with brake] (Kg) | 10 (12) |

## TORQUE CURVE
### R1AA13200F [2kW] + RS3A10

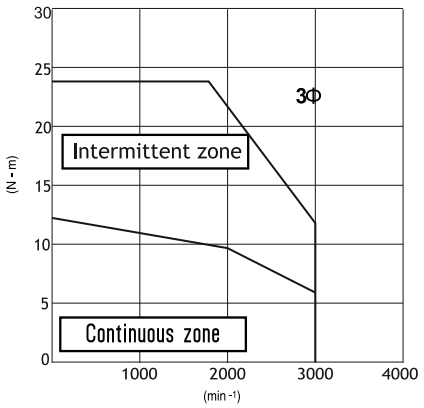


WITHOUT BRAKE
R2AA13200LXR00M



Indicated performances refer to motor controlled by related new RS3 standard and EtherCat amplifiers.

3Φ = torque curve with three-phase power supply

WITHOUT BRAKE
R2AA13200LCR00M



## Suggested amplifiers: RS3A05A0AA2, RS3A05A2HA4W00

R.T.A. s.r.l. PAVIA (ITALY) SANYO DENKI CO.,Ltd (JAPAN)

# R2CA18350LXR00M (R2CA18350LCR00M)

SANYO DENKI
SANMOTION

## Dimensions (Unit:mm)

c UL us

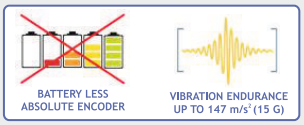


400
VAC

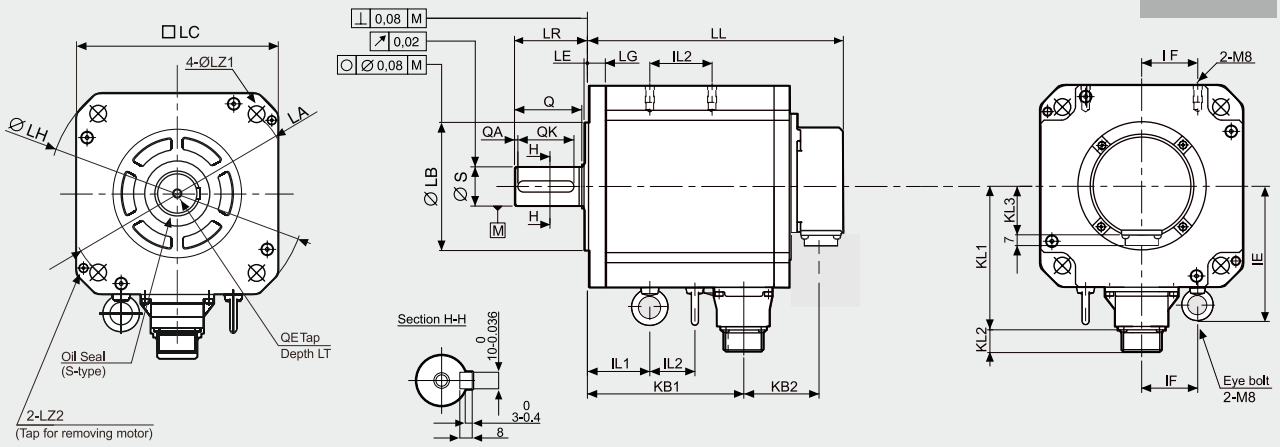


| without brake LL | without brake KB2 | with brake LL | with brake KB2 | KL1 | KL2 | KL3 | LG | LA | LB | LE | LH | LC | LZ1 | LZ2 | LR | S | Q | QA | QK | IL1 | IL2 | IF | IE | KB1 | QE | LT |
|---|---|---|---|---|---|---|---|---|---|---|---|---|---|---|---|---|---|---|---|---|---|---|---|---|---|---|
| 159 | 52 | 206 | 99 | 123 | 21 | 38 | 16 | 200 | 0 Ø114.3-0.035 | 3 | Ø230 | □180 | Ø13.5 | M8 | 65 | 0 Ø35-0.016 | 60 | 3 | 50 | 47 | 20 | 50 | 123 | 92 | M8 | 25 |

## FEATURES

| MODEL | | R2CA18350LXR00M (R2CA18350LCR00M) |
|---|---|---|
| NOMINAL POWER | (W) | 3500 |
| NOMINAL SPEED | (rpm) | 2000 |
| MAXIMUM SPEED | (rpm) | 3000 |
| NOMINAL TORQUE | (Nm) | 17.0 |
| STALL TORQUE | (Nm) | 22.0 |
| MAXIMUM TORQUE | (Nm) | 49.0 |
| INERTIA | ($Kg*m^2$) | $40\times10^{-4}$ |
| BATTERY-LESS ABSOLUTE ENCODER | (imp./rev) | SINGLE TURN: 131072 imp/rev (17 bit)<br>MULTI TURN: 65536 turns (16 bit) |
| PROTECTION DEGREE | | IP65 |
| WEIGHT | (Kg) | 15.5 |

## TORQUE CURVE

R2CA18350LXH [3.5kW] + RS3C05

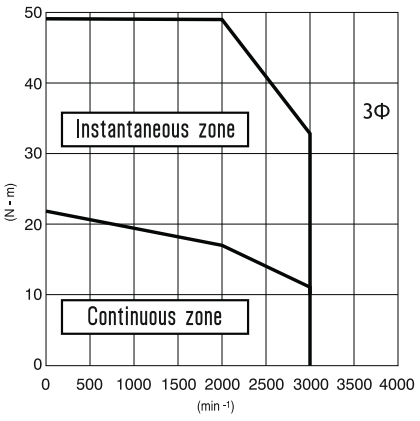


WITHOUT BRAKE



Indicated performances refer to motor controlled by related RS3 standard and EtherCat amplifiers.

3Φ = torque curve with three-phase power supply

WITH BRAKE

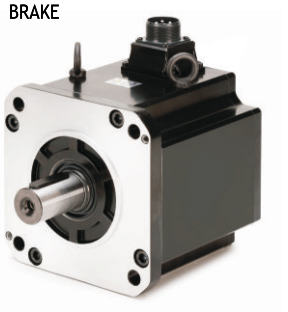

## Suggested amplifiers: RS3C05A0AA2, RS3C05A2HA4

R.T.A. s.r.l. PAVIA (ITALY) SANYO DENKI CO.,Ltd (JAPAN)

# R2CA18450HXR00M (R2CA18450HCR00M)

SANYO DENKI
SANMOTION

## Dimensions (Unit:mm)

BATTERY LESS ABSOLUTE ENCODER

VIBRATION ENDURANCE UP TO 147 m/s² (15 G)

400 VAC

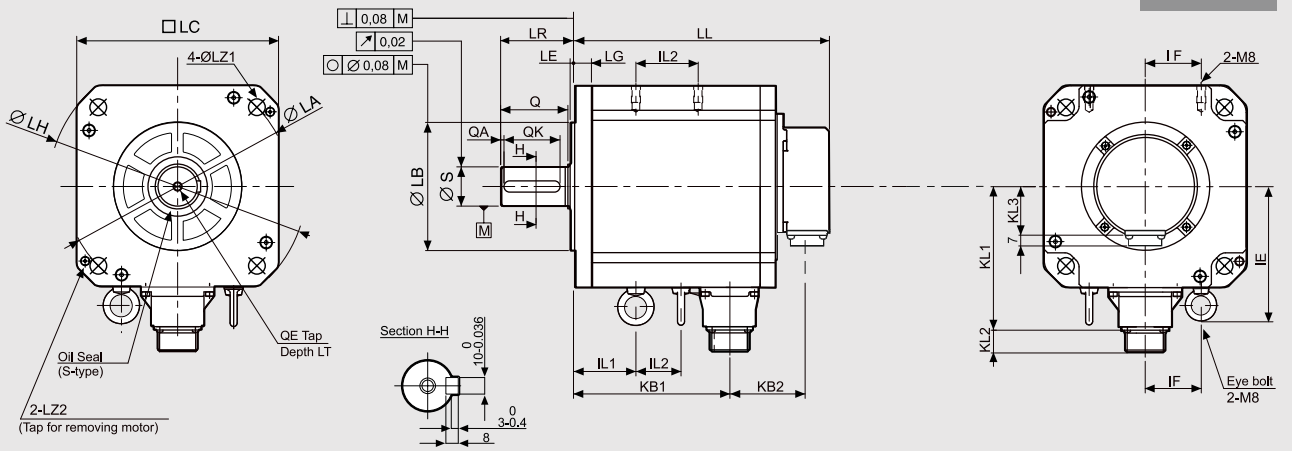


| without brake LL | without brake KB2 | with brake LL | with brake KB2 | KL1 | KL2 | KL3 | LG | LA | LB | LE | LH | LC | LZ1 | LZ2 | LR | S | Q | QA | QK | IL1 | IL2 | IF | IE | KB1 | QE | LT |
|---|---|---|---|---|---|---|---|---|---|---|---|---|---|---|---|---|---|---|---|---|---|---|---|---|---|---|
| 176 | 52 | 223 | 99 | 123 | 21 | 38 | 16 | 200 | 0 Ø114.3-0.035 | 3 | Ø230 | □180 | Ø13.5 | M8 | 65 | 0 Ø35-0.016 | 60 | 3 | 50 | 57 | 20 | 50 | 123 | 109 | M8 | 25 |

## FEATURES

| MODEL | | R2CA18450HXR00M (R2CA18450HCR00M) |
|---|---|---|
| NOMINAL POWER | (W) | 4500 |
| NOMINAL SPEED | (rpm) | 2000 |
| MAXIMUM SPEED | (rpm) | 3500 |
| NOMINAL TORQUE | (Nm) | 21.5 |
| STALL TORQUE | (Nm) | 30 |
| MAXIMUM TORQUE | (Nm) | 75.0 |
| INERTIA | ($Kg*m^2$) | $50\times10^{-4}$ |
| BATTERY-LESS ABSOLUTE ENCODER | (imp./rev) | SINGLE TURN: 131072 imp/rev (17 bit)<br>MULTI TURN: 65536 turns (16 bit) |
| PROTECTION DEGREE | | IP65 |
| WEIGHT | (Kg) | 20 [24] |

## TORQUE CURVE

R2CA18450HX [4.5kW] + RS3C10

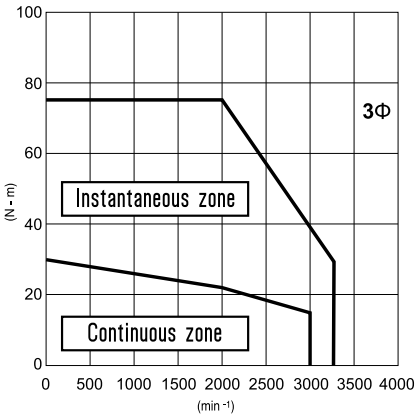


WITHOUT BRAKE



Indicated performances refer to motor controlled by related RS3 standard and EtherCat amplifiers.

3Φ = torque curve with three-phase power supply

WITH BRAKE



## Suggested amplifiers: RS3C10A0AA2, RS3C10A2HA4

R.T.A. s.r.l. PAVIA (ITALY) SANYO DENKI CO.,Ltd (JAPAN)

# R2CA18750HCR00M

SANYO DENKI
SANMOTION

## Dimensions (Unit:mm)

cULus

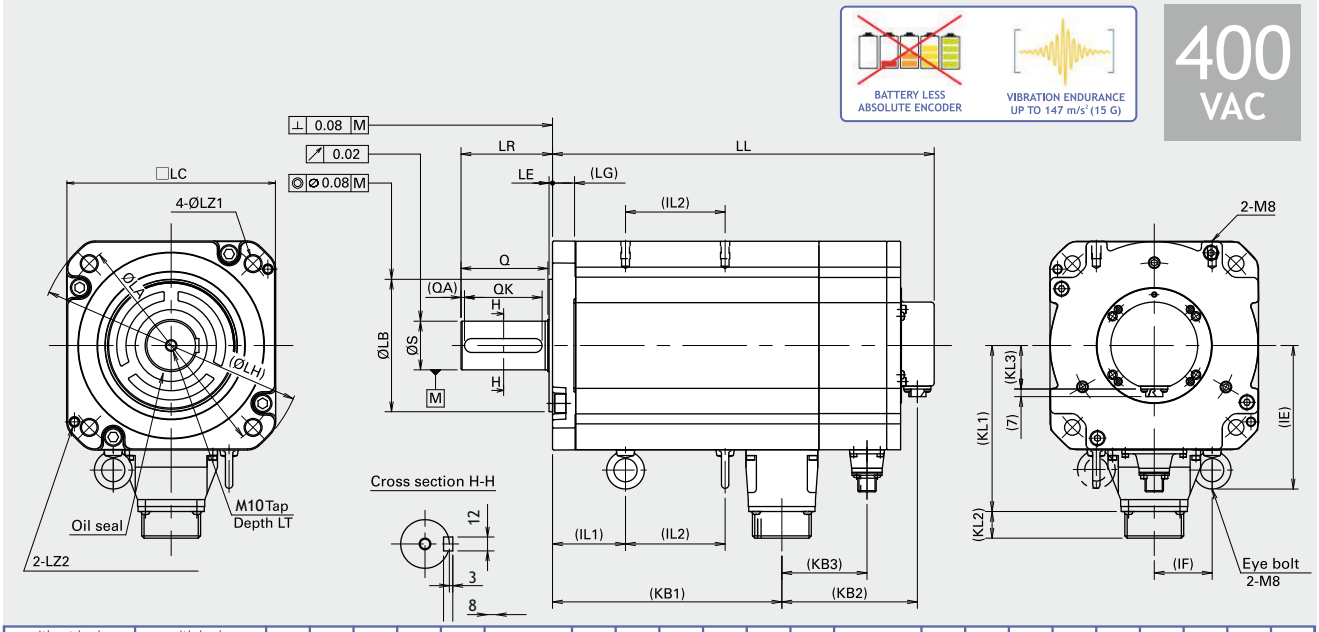


| without brake | | | with brake | | | LG | KL1 | KL2 | KL3 | LA | LB | LE | LH | LC | LZ1 | LZ2 | LR | S | Q | QA | QK | KB1 | LT | IE | IF | IL1 | IL2 |
|---|---|---|---|---|---|---|---|---|---|---|---|---|---|---|---|---|---|---|---|---|---|---|---|---|---|---|---|
| LL | KB2 | KB3 | LL | KB2 | KB3 | | | | | | | | | | | | | | | | | | | | | | |
| -- | -- | -- | 329 | 117 | 74 | 19 | 144 | 22 | 38 | 200 | 0 -0.0035 114.3 | 3 | 230 | 180 | 13.5 | M8 | 79 | 0 -0.016 42 | 75 | 3 | 67 | 198 | 25 | 123 | 50 | 63 | 86 |

## FEATURES

| MODEL | | R2CA18750HCR00M |
|---|---|---|
| NOMINAL POWER | (W) | 7500 |
| NOMINAL SPEED | (rpm) | 1500 |
| MAXIMUM SPEED | (rpm) | 3000 |
| NOMINAL TORQUE | (Nm) | 48 |
| STALL TORQUE | (Nm) | 54.9 |
| MAXIMUM TORQUE | (Nm) | 140 |
| INERTIA | ($Kg*m^2$) | $98\times10^{-4}$ |
| BATTERY-LESS ABSOLUTE ENCODER | (imp./rev) | SINGLE TURN: 131072 imp/rev (17 bit)<br>MULTI TURN: 65536 turns (16 bit) |
| PROTECTION DEGREE | | IP65 |
| WEIGHT | (Kg) | 38 |

## TORQUE CURVE
### R2CA18750HCR [7.5 KW] + RS3C15

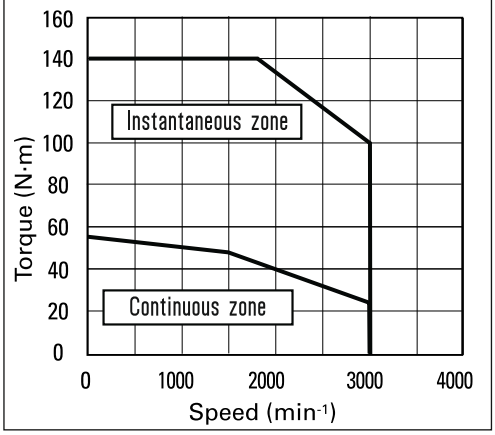


R2CA18750HCR00M

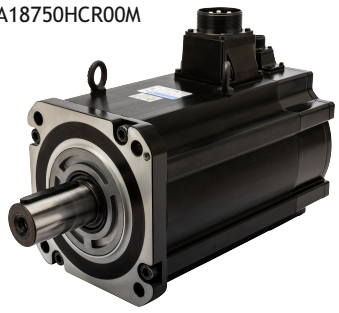

Indicated performances refer to motor controlled by related RS3 standard and EtherCat amplifiers.

3Φ = torque curve with three-phase power supply

## Suggested amplifiers: RS3C15A2HL4

R.T.A. s.r.l. PAVIA (ITALY) SANYO DENKI CO.,Ltd (JAPAN)

# R2CA2215KVXH00M

SANYO DENKI
SANMOTION

## Dimensions (Unit:mm)

400 VAC

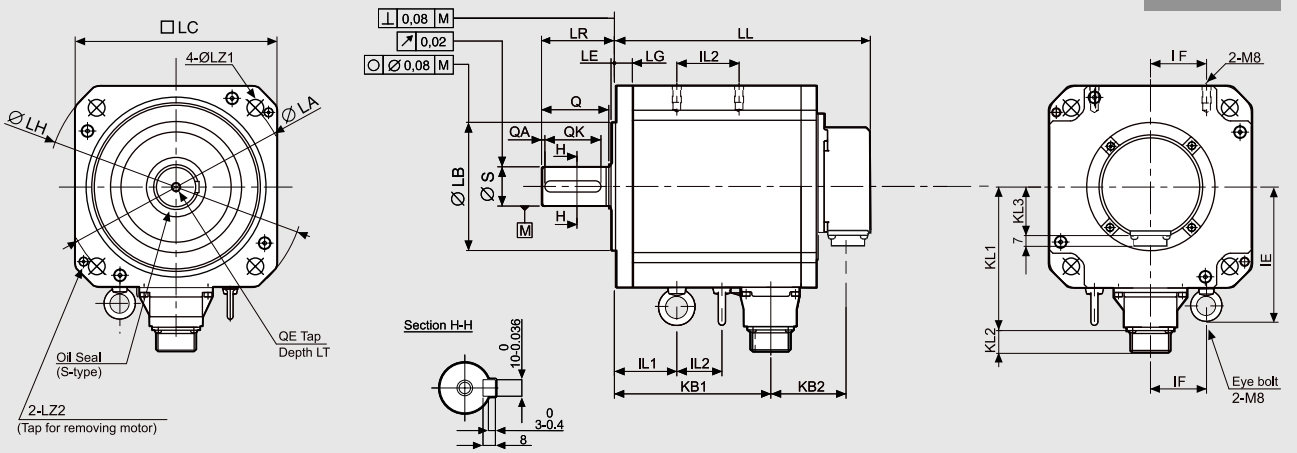


| LL | KB2 | KL1 | KL2 | KL3 | LG | LA | LB | LE | LH | LC | LZ1 | LZ2 | LR | S | Q | QA | QK | IL1 | IL2 | IF | IE | KB1 | QE | LT |
|---|---|---|---|---|---|---|---|---|---|---|---|---|---|---|---|---|---|---|---|---|---|---|---|---|
| 397 | 78 | 162 | 22 | 38 | 19 | 235 | 0 Ø200-0.046 | 4 | Ø270 | □220 | Ø13.5 | M10 | 79 | 0 Ø55-0.019 | 79 | 3 | 67 | 98 | 150 | 60 | 142 | 304 | M10 | 25 |

## FEATURES

| MODEL | | R2CA2215KVXH00M |
|---|---|---|
| NOMINAL POWER | (W) | 15000 |
| NOMINAL SPEED | (rpm) | 1500 |
| MAXIMUM SPEED | (rpm) | 2500 |
| NOMINAL TORQUE | (Nm) | 95.0 |
| STALL TORQUE | (Nm) | 95.0 |
| MAXIMUM TORQUE | (Nm) | 215 |
| INERTIA | ($Kg*m^2$) | $288\times10^{-4}$ |
| ENCODER | (imp./rev) | 131072 (17BIT) |
| PROTECTION DEGREE | | IP67 |
| WEIGHT | (Kg) | 74 |

## TORQUE CURVE

R2CA2215KVXH [15.0kW] + RS3C15

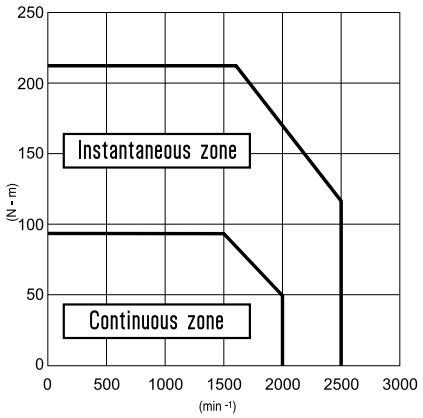


WITHOUT BRAKE



(Version with brake available on request)

Indicated performances refer to motor controlled by related RS3 standard amplifiers.

## Suggested amplifiers: RS3C15A0AL2

R.T.A. s.r.l. PAVIA (ITALY) SANYO DENKI CO.,Ltd (JAPAN)

# GAM1AA150F0XRB3

## Dimensions (Unit:mm)

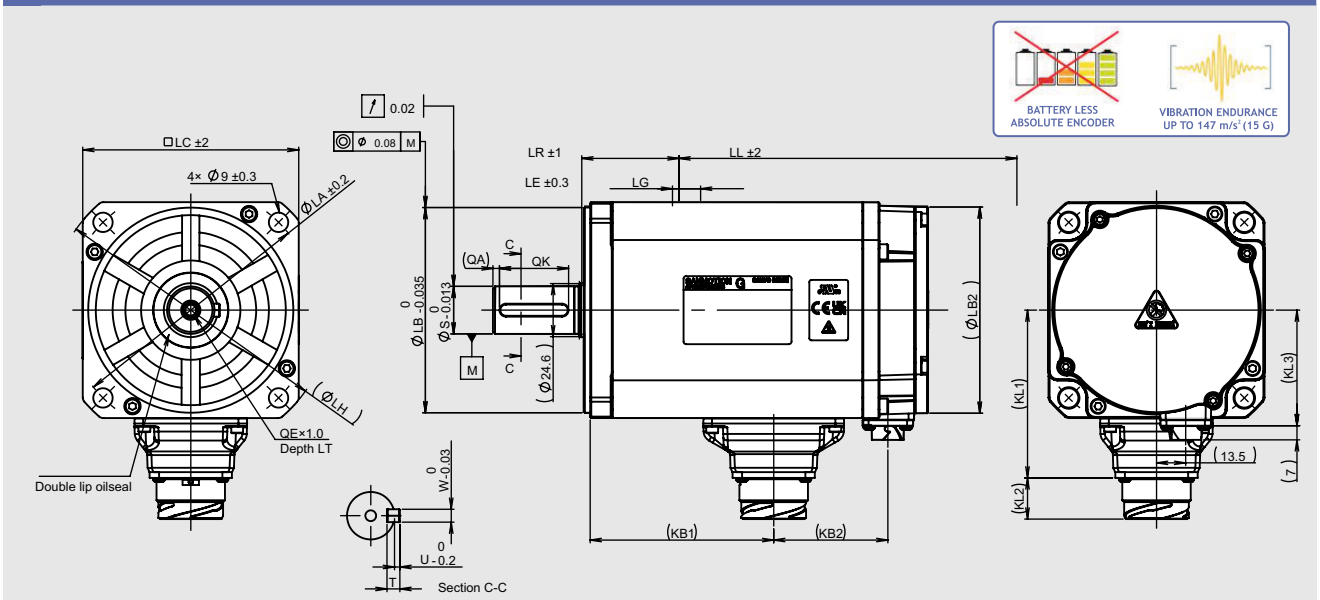


| without brake | | with brake | | | | | | | | | | | | | | | | | | | | |
|---|---|---|---|---|---|---|---|---|---|---|---|---|---|---|---|---|---|---|---|---|---|---|
| LL | KB2 | LL | KB2 | KL1 | KL2 | KL3 | LG | LA | LB | LE | LH | LC | LZ1 | LB2 | LR | S | QA | QK | W | T | U | KB1 | QE | LT |
| 161 | 53 | 205.5 | 90 | 78 | 19 | 54 | 10 | 115 | 0<br>95.5-0.035 | 3 | 130 | 100 | 9 | 95.5 | 45 | 0<br>22-0.013 | 3 | 32 | 0<br>6-0.03 | 6 | 2.5 | 85 | M6 | 20 |

| MODEL | | GAM1AA150F0XRB3 |
|---|---|---|
| NOMINAL POWER | (W) | 1500 |
| NOMINAL SPEED | (rpm) | 3000 |
| MAXIMUM SPEED | (rpm) | 6000 |
| NOMINAL TORQUE | (Nm) | 4.8 |
| STALL TORQUE | (Nm) | 4.9 |
| MAXIMUM TORQUE | (Nm) | 15.0 |
| INERTIA | ($Kg*m^2$) | $1.98x10^{-4}$ |
| ENCODER | (imp./rev) | SINGLE TURN: 131072 imp/rev (17 bit)<br>MULTI TURN: 65536 turns (16 bit) |
| PROTECTION DEGREE | | IP67 |
| WEIGHT | (Kg) | 5.0 |

## TORQUE CURVE
### GAM1AA150F0XRB3 + RS3A05

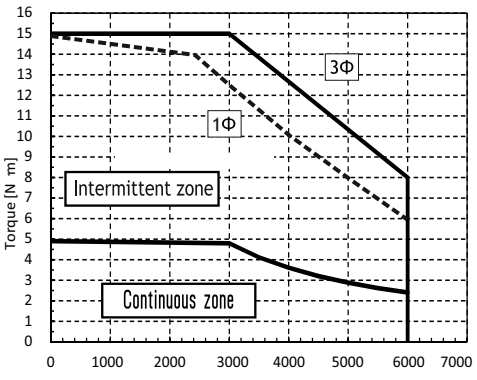


GAM1AA150F0XRB3

Indicated performances refer to motor controlled by related new RS3 standard and EtherCat amplifiers.

1Φ torque curve with single phase power supply
3Φ = torque curve with three-phase power supply

## Suggested amplifiers: RS3A05A2HA4W00, RS3A05A0AA2, RS3A05A2HAE

R.T.A. s.r.l. PAVIA (ITALY) SANYO DENKI CO.,Ltd (JAPAN)

# GAM2A4010F0XRK2 [GAM2A4010F0CRK2]

SANYO DENKI
SANMOTION

## Dimensions (Unit:mm)

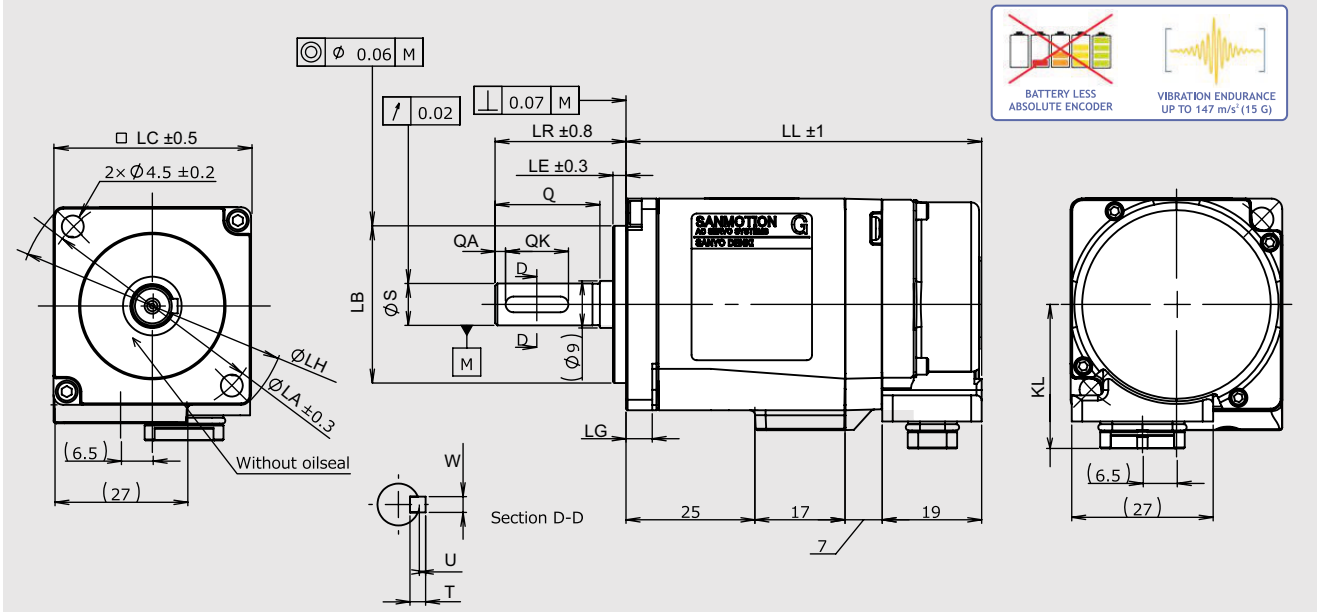


| without brake LL | with brake LL | LG | KL | LA | LB | LE | LH | LC | LZ | LR | S | Q | QA | QK | W | T | U | QE | LT |
|---|---|---|---|---|---|---|---|---|---|---|---|---|---|---|---|---|---|---|---|
| 68 | 100.5 | 5 | 27.6 | 46 | 0 30-0.021 | 2.5 | 56 | 40 | 2-Ø4.5 | 25 | 0 8-0.009 | 20 | 2 | 12 | 3 | 3 | 1.2 | -- | -- |

## FEATURES

| MODEL | | GAM2A4010F0XRK2 |
|---|---|---|
| NOMINAL POWER [version with brake] | (W) | 100 |
| NOMINAL SPEED | (rpm) | 3000 |
| MAXIMUM SPEED | (rpm) | 6500 |
| NOMINAL TORQUE | (Nm) | 0.318 |
| STALL TORQUE | (Nm) | 0.318 |
| MAXIMUM TORQUE | (Nm) | 1.18 |
| INERTIA | ($Kg*m^2$) | $0.0600\times10^{-4}$ |
| BATTERY LESS ABSOLUTE ENCODER | | SINGLE TURN: (23 bit)<br>MULTI TURN: 65536 turns |
| PROTECTION DEGREE | | IP67* |
| WEIGHT [version with brake] | (Kg) | 0.39 |

* Protection degree IP67 (except for the shaft hole and the edge of the cable).

## TORQUE CURVE
### GAM2A4010F0XRK2 + GAD amplifier

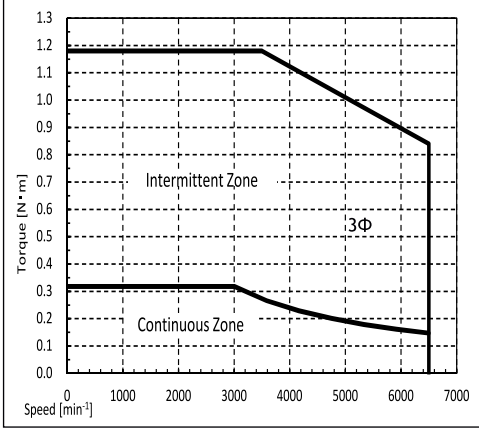


WITHOUT BRAKE
GAM2A4010F0XRK2

Indicated performances refer to motor controlled by related new GAD EtherCAT series amplifiers.

3Φ = torque curve with three-phase power supply

WITH BRAKE
GAM2A4010F0CRK2

## Suggested amplifiers: GADSA03AH24

R.T.A. s.r.l. PAVIA (ITALY) SANYO DENKI CO.,Ltd (JAPAN)

# GAM2A6020F0XRK2 [GAM2A6020F0CRK2]

SANYO DENKI
SANMOTION

## Dimensions (Unit:mm)

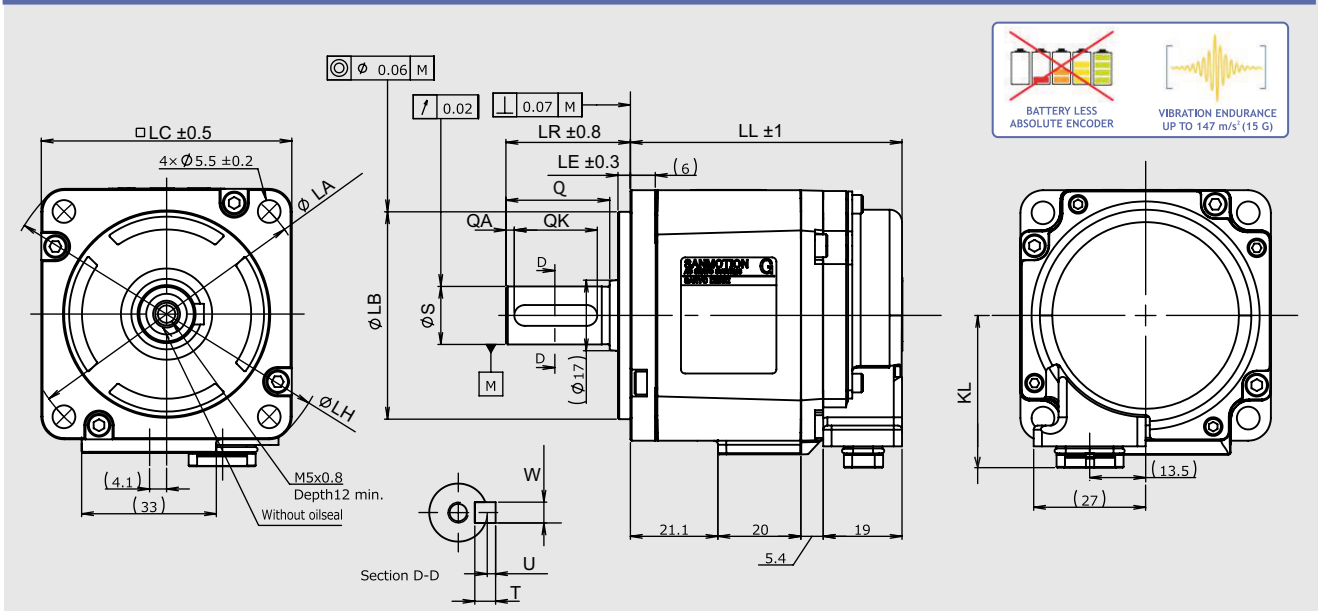


| without brake LL | with brake LL | LG | KL | LA | LB | LE | LH | LC | LZ | LR | S | Q | QA | QK | W | T | U | QE | LT |
|---|---|---|---|---|---|---|---|---|---|---|---|---|---|---|---|---|---|---|---|
| 65.5 | 91.5 | 6 | 36.8 | 70 | 0 -0.025 | 3.0 | 81 | 60 | -- | 30 | 0 -0.011 | 25 | 2 | 20 | 5 | 5 | 2 | -- | -- |

## FEATURES

| MODEL | | GAM2A6020F0XRK2 |
|---|---|---|
| NOMINAL POWER | (W) | 200 |
| NOMINAL SPEED | (rpm) | 3000 |
| MAXIMUM SPEED | (rpm) | 6500 |
| NOMINAL TORQUE | (Nm) | 0.637 |
| STALL TORQUE | (Nm) | 0.686 |
| MAXIMUM TORQUE | (Nm) | 2.20 |
| INERTIA | ($Kg*m^2$) | $0.247\times10^{-4}$ |
| BATTERY LESS ABSOLUTE ENCODER | | SINGLE TURN: (23 bit)<br>MULTI TURN: 65536 turns |
| PROTECTION DEGREE | | IP67* |
| WEIGHT | (Kg) | 0.80 |

* Protection degree IP67 (except for the shaft hole and the edge of the cable).

## TORQUE CURVE
### GAM2A6020F0XRK2 + GAD amplifier

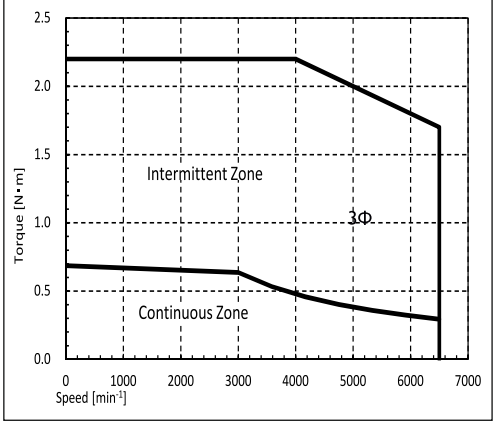


WITHOUT BRAKE
GAM2A6020F0XRK2

Indicated performances refer to motor controlled by related new GAD EtherCAT series amplifiers.

3Φ = torque curve with three-phase power supply

WITH BRAKE
GAM2A6020F0CRK2

## Suggested amplifiers: GADSA03AH24

R.T.A. s.r.l. PAVIA (ITALY) SANYO DENKI CO.,Ltd (JAPAN)

# GAM2A6040F0XRK2 [GAM2A6040F0CRK2] SANYO DENKI SANMOTION

## Dimensions (Unit:mm)

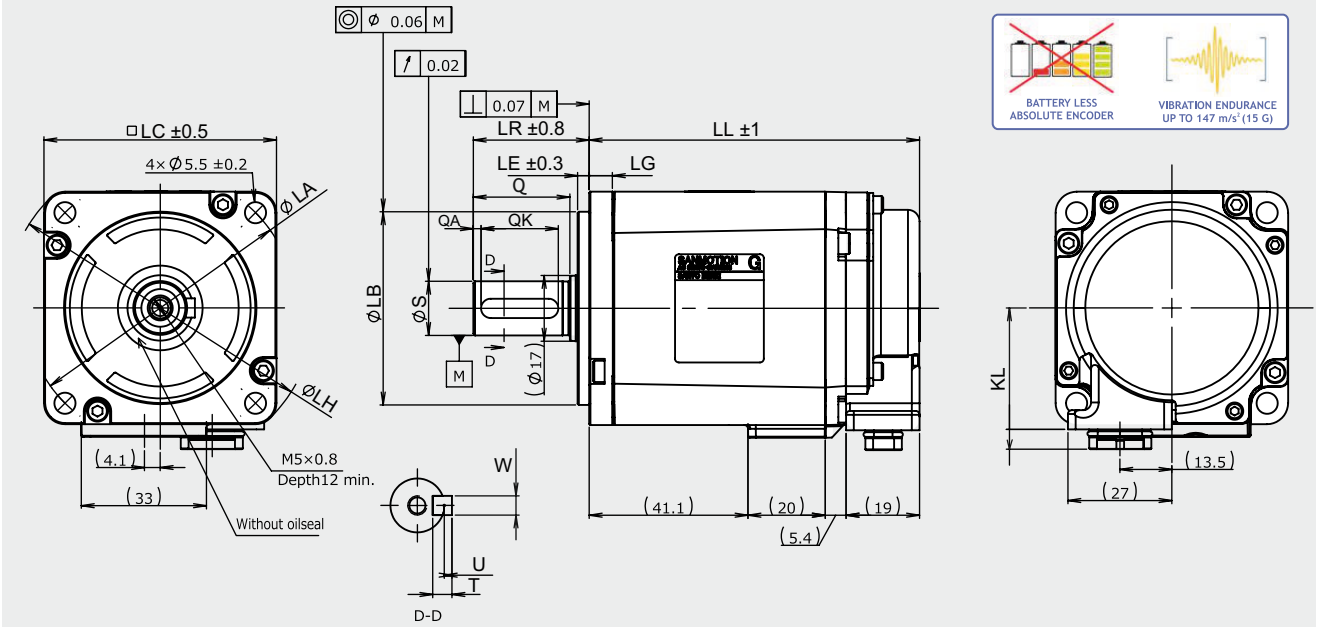


| without brake LL | with brake LL | LG | KL | LA | LB | LE | LH | LC | LZ | LR | S | Q | QA | QK | W | T | U | QE | LT |
|---|---|---|---|---|---|---|---|---|---|---|---|---|---|---|---|---|---|---|---|
| 85.5 | 111.5 | 6 | 36.8 | 70 | 0<br>50-0.025 | 3.0 | 81 | 60 | -- | 30 | 0<br>14-0.011 | 25 | 2 | 20 | 5 | 5 | 2 | -- | -- |

## FEATURES

| MODEL | | GAM2A6040F0XRK2 [GAM2A6040F0CRK2] |
|---|---|---|
| NOMINAL POWER | (W) | 400 |
| NOMINAL SPEED | (rpm) | 3000 |
| MAXIMUM SPEED | (rpm) | 6500 |
| NOMINAL TORQUE | (Nm) | 1.270 |
| STALL TORQUE | (Nm) | 1.370 |
| MAXIMUM TORQUE | (Nm) | 4.80 |
| INERTIA | (Kg*m²) | 0.460 ×10⁻⁴ [0.534×10⁻⁴] |
| BATTERY LESS ABSOLUTE ENCODER | | SINGLE TURN: (23 bit)<br>MULTI TURN: 65536 turns |
| PROTECTION DEGREE | | IP67* |
| WEIGHT | [version with brake] (Kg) | 1.2 [1.6] |

* Protection degree IP67 (except for the shaft hole and the edge of the cable).

## TORQUE CURVE
### GAM2A6040F0XRK2 + GAD amplifier

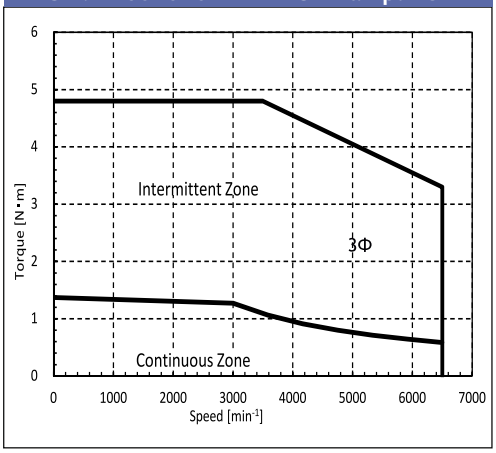


WITHOUT BRAKE
GAM2A6040F0XRK2

Indicated performances refer to motor controlled by related new GAD EtherCAT series amplifiers.

3Φ = torque curve with three-phase power supply

WITH BRAKE
GAM2A6040F0CRK2

## Suggested amplifiers: GADSA03AH24

R.T.A. s.r.l. PAVIA (ITALY) SANYO DENKI CO.,Ltd (JAPAN)

# GAM2A8075F0XRK2 [GAM2A8075F0CRK2] SANYO DENKI SANMOTION

## Dimensions (Unit:mm)

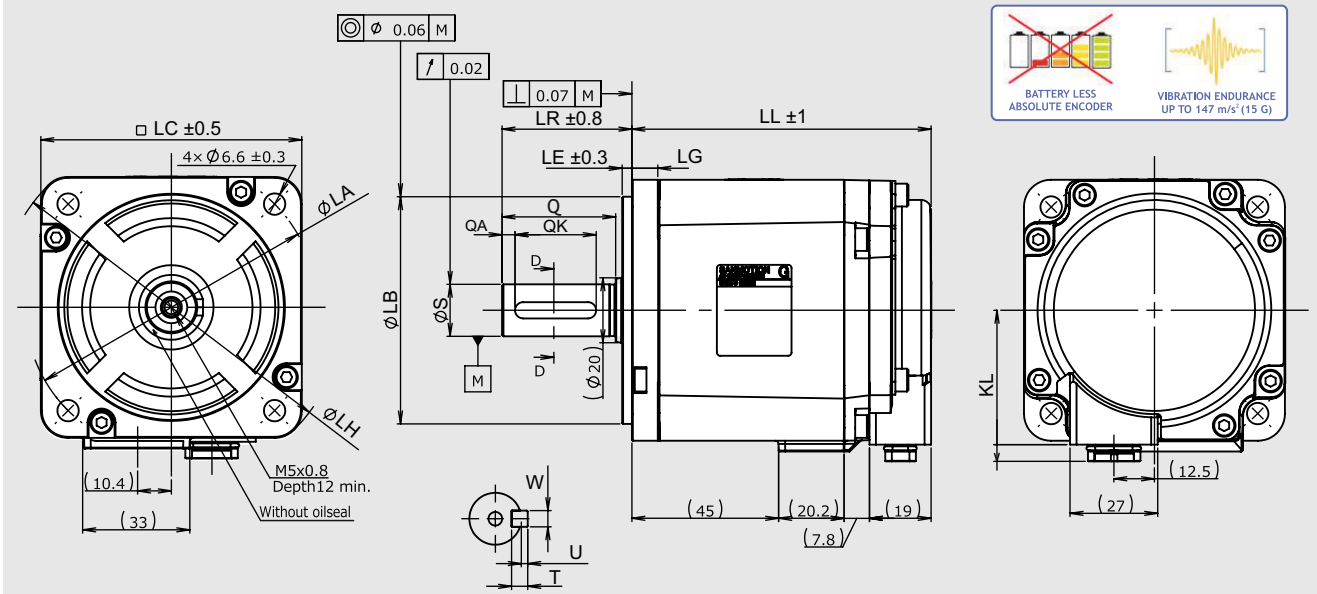


| without brake LL | with brake LL | LG | KL | LA | LB | LE | LH | LC | LZ | LR | S | Q | QA | QK | W | T | U | QE | LT |
|---|---|---|---|---|---|---|---|---|---|---|---|---|---|---|---|---|---|---|---|
| 92 | 126 | 8 | 46.6 | 90 | 0 70-0.030 | 3.0 | 107 | 80 | -- | 40 | 0 16-0.011 | 35 | 4 | 25 | 5 | 5 | 2 | -- | -- |

## FEATURES

| MODEL | | GAM2A8075F0XRK2 [GAM2A8075F0CRK2] |
|---|---|---|
| NOMINAL POWER | (W) | 750 |
| NOMINAL SPEED | (rpm) | 3000 |
| MAXIMUM SPEED | (rpm) | 6500 |
| NOMINAL TORQUE | (Nm) | 2.390 |
| STALL TORQUE | (Nm) | 2.550 |
| MAXIMUM TORQUE | (Nm) | 8.50 |
| INERTIA | ($Kg*m^2$) | $1.560 \times 10^{-4}$ [$1.760 \times 10^{-4}$] |
| BATTERY LESS ABSOLUTE ENCODER | | SINGLE TURN: (23 bit) MULTI TURN: 65536 turns |
| PROTECTION DEGREE | | IP67* |
| WEIGHT [version with brake] | (Kg) | 2.2 [3] |

* Protection degree IP67 (except for the shaft hole and the edge of the cable).

## TORQUE CURVE
### GAM2A8075F0XRK2 + GAD amplifier

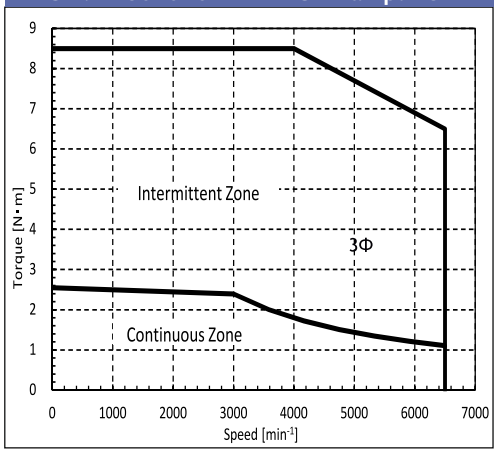


WITHOUT BRAKE
GAM2A8075F0XRK2

Indicated performances refer to motor controlled by related new GAD EtherCAT series amplifiers.

3Φ = torque curve with three-phase power supply

WITH BRAKE
GAM2A8075F0CRK2

## Suggested amplifiers: GADSA03AH24

R.T.A. s.r.l. PAVIA (ITALY) SANYO DENKI CO.,Ltd (JAPAN)

# GAM2A9100H0XRK2 [GAM2A9100H0CRK3] SANYO DENKI SANMOTION

## Dimensions (Unit:mm)

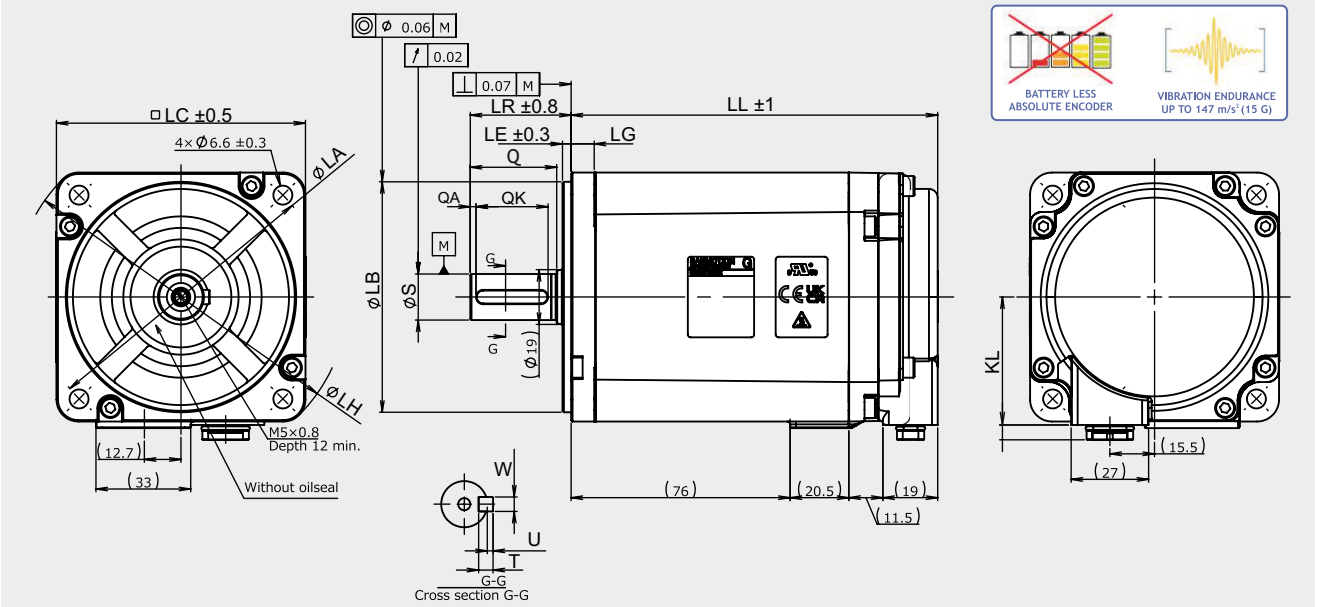


| without brake LL | with brake LL | LG | KL | LA | LB | LE | LH | LC | LZ | LR | S | Q | QA | QK | W | T | U | QE | LT |
|---|---|---|---|---|---|---|---|---|---|---|---|---|---|---|---|---|---|---|---|
| 127 | 153 | 8 | 49.6 | 100 | 0 80-0.03 | 3.0 | 116 | 86 | -- | 35 | 0 16-0.011 | 30 | 2 | 25 | 5 | 5 | 2 | -- | -- |

## FEATURES

| MODEL | | GAM2A9100H0XRK2 |
|---|---|---|
| NOMINAL POWER | (W) | 1000 |
| NOMINAL SPEED | (rpm) | 3000 |
| MAXIMUM SPEED | (rpm) | 3000 |
| NOMINAL TORQUE | (Nm) | 3.180 |
| STALL TORQUE | (Nm) | 3.920 |
| MAXIMUM TORQUE | (Nm) | 11.60 |
| INERTIA | ($Kg*m^2$) | $2.450 \times 10^{-4}$ |
| BATTERY LESS ABSOLUTE ENCODER | | SINGLE TURN: (23 bit)<br>MULTI TURN: 65536 turns |
| PROTECTION DEGREE | | IP67* |
| WEIGHT [version with brake] | (Kg) | 3.4 |

* Protection degree IP67 (except for the shaft hole and the edge of the cable).

## TORQUE CURVE
### GAM2A9100H0XRK2 + GAD amplifier

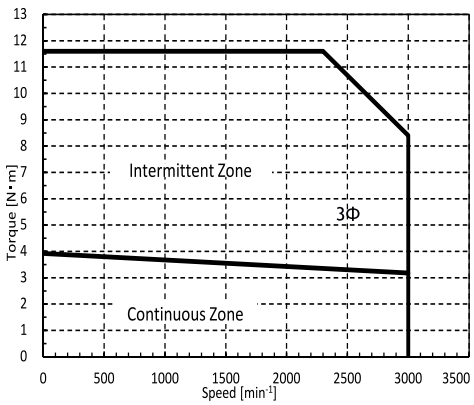


WITHOUT BRAKE
GAM2A9100H0XRK2

Indicated performances refer to motor controlled by related new GAD EtherCAT series amplifiers.

3Φ = torque curve with three-phase power supply

WITH BRAKE
GAM2A9100H0CRK2

## Suggested amplifiers: GADSA03AH24

R.T.A. s.r.l. PAVIA (ITALY) SANYO DENKI CO.,Ltd (JAPAN)

# GAM2AA1050B0XNB3 [GAM2AA10150B0CNB3]

## Dimensions (Unit:mm)

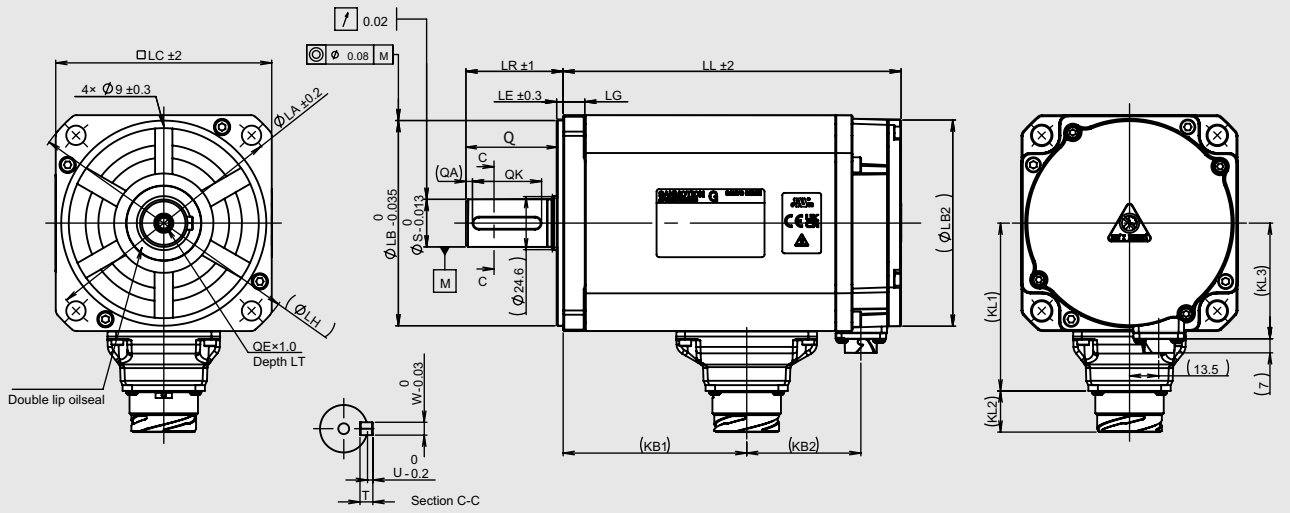


| without brake LL | KB2 | with brake LL | KB2 | KL1 | KL2 | KL3 | LG | LA | LB | LE | LH | LC | LZ1 | LB2 | LR | S | Q | QA | QK | W | T | U | KB1 | QE | LT |
|---|---|---|---|---|---|---|---|---|---|---|---|---|---|---|---|---|---|---|---|---|---|---|---|---|---|
| 161 | 45 | 205.5 | 90 | 78 | 19 | 54 | 10 | 115 | 0 95.5-0.035 | 3 | 130 | 100 | 9 | 95.5 | 45 | 0 22-0.013 | 40 | 3 | 32 | 0 6-0.03 | 6 | 2.5 | 97.5 | M6 | 20 |

| MODEL | | GAM2AA10150B0XNB3 [GAM2AA10150B0CNB3] |
|---|---|---|
| NOMINAL POWER | (W) | 1500 |
| NOMINAL SPEED | (rpm) | 2000 |
| MAXIMUM SPEED | (rpm) | 2000 |
| NOMINAL TORQUE | (Nm) | 7.2 |
| STALL TORQUE | (Nm) | 7.7 |
| MAXIMUM TORQUE | (Nm) | 20.5 |
| INERTIA | ($Kg*m^2$) | $6.10x10^{-4}$ [$6.45x10^{-4}$] |
| ENCODER | (imp./rev) | SINGLE TURN: 131072 imp/rev (17 bit)<br>MULTI TURN: 65536 turns (16 bit) |
| PROTECTION DEGREE | | IP67 |
| WEIGHT | [version with brake] (Kg) | 5.9 [7.5] |

### TORQUE CURVE
GAM2AA10150B0X[C] + RS3A03

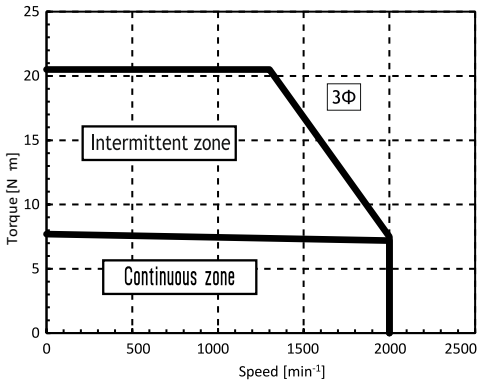


WITHOUT BRAKE
GAM2AA10150B0XNB3

Indicated performances refer to motor controlled by related new RS3 standard and EtherCat amplifiers.

1Φ torque curve with single phase power supply
3Φ = torque curve with three-phase power supply

WITH BRAKE
GAM2AA10150B0CNB3

**Suggested amplifiers:** RS3A03A2HA4W00, RS3A03A0AA2, RS3A03A2HAE

R.T.A. s.r.l. PAVIA (ITALY) SANYO DENKI CO.,Ltd (JAPAN)

# GAM2AA150B0XRB3 [GAM2AA150B0CRB3]

## Dimensions (Unit:mm)

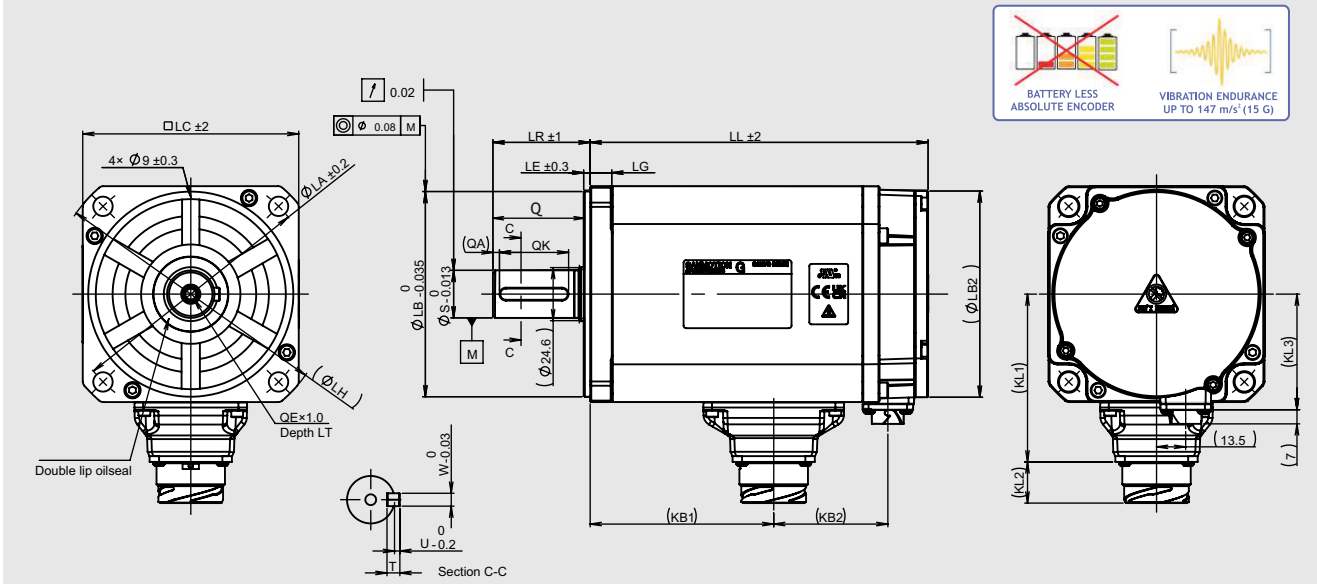


| without brake LL | KB2 | with brake LL | KB2 | KL1 | KL2 | KL3 | LG | LA | LB | LE | LH | LC | LZ1 | LB2 | LR | S | Q | QA | QK | W | T | U | KB1 | QE | LT |
|---|---|---|---|---|---|---|---|---|---|---|---|---|---|---|---|---|---|---|---|---|---|---|---|---|---|
| 161 | 45 | 205.5 | 90 | 78 | 19 | 54 | 10 | 115 | 0 95.5-0.035 | 3 | 130 | 100 | 9 | 95.5 | 45 | 0 22-0.013 | 40 | 3 | 32 | 0 6-0.03 | 6 | 2.5 | 97.5 | M6 | 20 |

| MODEL | | GAM2AA150B0XRB3 [GAM2AA150B0CRB3] |
|---|---|---|
| NOMINAL POWER | (W) | 1500 |
| NOMINAL SPEED | (rpm) | 2000 |
| MAXIMUM SPEED | (rpm) | 2000 |
| NOMINAL TORQUE | (Nm) | 7.2 |
| STALL TORQUE | (Nm) | 7.7 |
| MAXIMUM TORQUE | (Nm) | 20.5 |
| INERTIA | ($Kg*m^2$) | $6.10x10^{-4}$ [$6.45x10^{-4}$] |
| ENCODER | (imp./rev) | SINGLE TURN: 131072 imp/rev (17 bit)<br>MULTI TURN: 65536 turns (16 bit) |
| PROTECTION DEGREE | | IP67 |
| WEIGHT | [version with brake] (Kg) | 5.9 [7.5] |

### TORQUE CURVE
GAM2AA10150B0X[C] + RS3A03

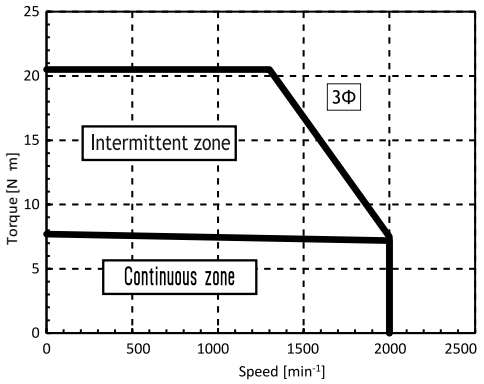


WITHOUT BRAKE
GAM2AA150B0XRB3

Indicated performances refer to motor controlled by related new RS3 standard and EtherCat amplifiers.

1Φ torque curve with single phase power supply
3Φ = torque curve with three-phase power supply

WITH BRAKE
GAM2AA150B0CRB3

## Suggested amplifiers: RS3A03A2HA4W00, RS3A03A0AA2, RS3A03A2HAE

R.T.A. s.r.l. PAVIA (ITALY) SANYO DENKI CO.,Ltd (JAPAN)



# PLANETARY GEARBOXES

# SG-P11-120-025-15-SM-286X-00000



PLANETARY GEARBOXES

SG 120

i=025

φ=15'

MADE IN ITALY

IP64

## Dimensions (Units:mm)

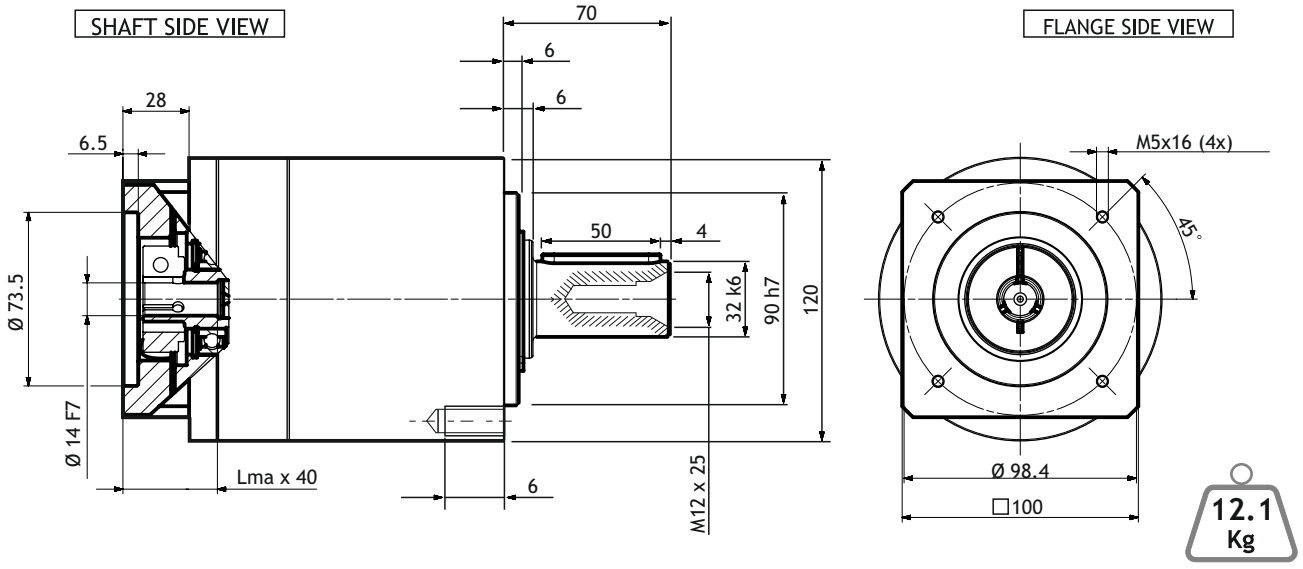


| MODEL | Rated output torque [Nm] | Maximum acceleration output torque [Nm] | Emergency step output torque [Nm] | Backlash [arcmin] | Nominal input speed [min$^{-1}$] | Maximum momentary input speed [min$^{-1}$] | Torsional stiffness [Nm/arcmin] | Maximum radial force applying on output shaft [N] | Maximum axial force applying on output shaft [N] | Gear efficiency [%] | Gear moment of inertia [Kgcm$^2$] |
|---|---|---|---|---|---|---|---|---|---|---|---|
| SG-P11-120-025-15-SM-286X-00000 | 110 | 190 | 360 | 15‘ | 3000 | 4500 | 22.5 | 3500 | 3000 | 94 | 0.71 |

## Suggested motors

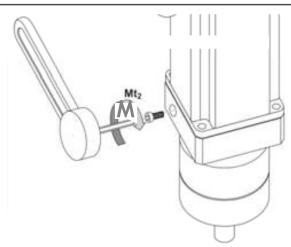

RM 3RxM



RM 3TxM-0xx0

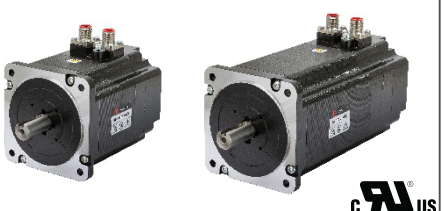

MOUNTING OPERATION MODE: ■ Tightening torque M=11 Nm ■ Locking bolt M6 ■ R.T.A. Quality Control

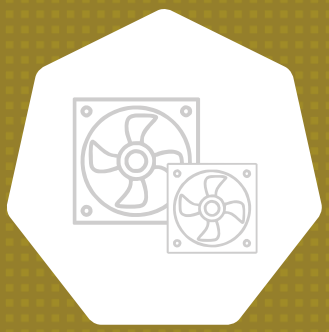

# COOLING FANS

# 9G1224H102

## 120x120x38 mm

**24 V**

### General Specifications

- Material:
  - Frame: Plastics (Flammability: UL 94V-0)
  - Impeller: Plastics (Flammability: UL 94V-1)
- Expected Life: 40,000 h (L10:Survival rate: 90% at 60°C, rated voltage, and continuously run in a free air state)
- Lead Wire: ⊕ red ⊖ black or blue
- Storage Temperature: -30°C to +70°C (Non-condensing)
- Ball bearings
- International Standards: UL/CSA, TÜV, RoHS

### Air Flow - Static Pressure Characteristics

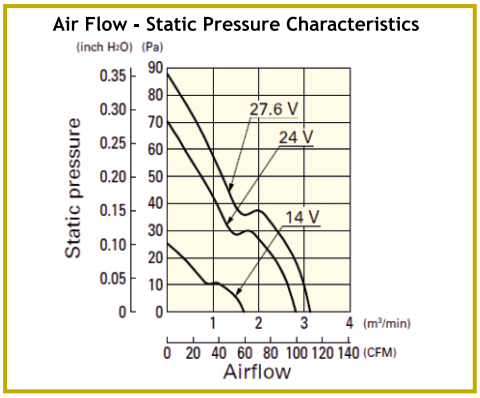


### Specifications

| Model No. | Rated Voltage [V] | Operating Voltage Range [V] | Rated Current [A] | Rated Input [W] | Rated Speed [min⁻¹] | Max. Air Flow [m³/min] | [CFM] | Max. Static Pressure [Pa] | [inchH2O] | SPL [dB(A)] | Operating Temperature [°C] | Expected Life [h] |
|---|---|---|---|---|---|---|---|---|---|---|---|---|
| 9G1224H102 | 24 | 14.0 to 27.6 | 0.22 | 5.28 | 2,600 | 2.8 | 99 | 70.4 | 0.283 | 39 | -20 to +70 | 40,000/60° |

### Dimensions (Unit:mm)

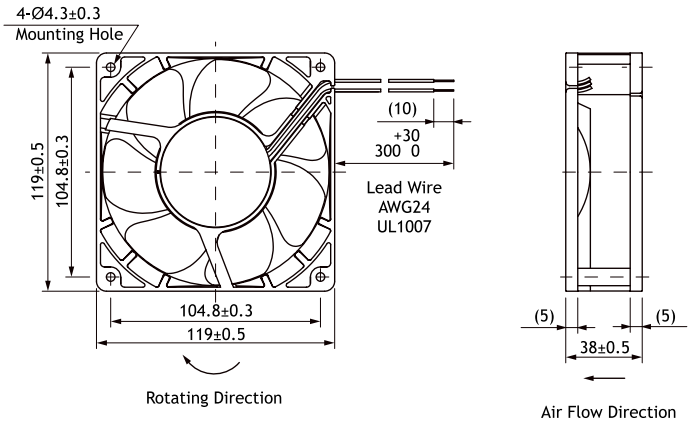


### Reference dimension of mounting holes and vent opening (Unit: mm)

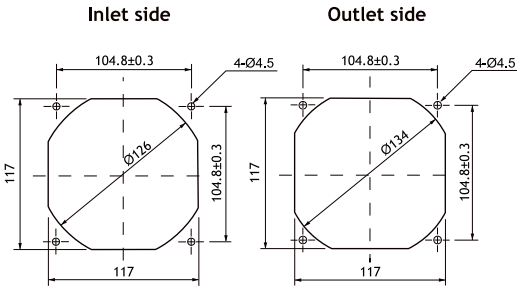


**120 mm sq.**




- Model always available on stock at R.T.A.
- Also available for online purchasing at www.rta-store.com

## ITALY

**Corporate Headquarter**

**R.T.A. srl**
Via E. Mattei 15, Fraz. Divisa - 27020 MARCIGNAGO (PV) ITALY
T +39.0382.929.855 | F +39.0382.929.150 | info@rta.it
**www.rta.it**

**Local Branches**

**R.T.A. Filiale Centro**
Centro Direzionale Cavour
Via Cavour 2, 40055 Villanova di Castenaso (BO) ITALY
T +39.051.780141 | rtabo@rta.it

## GERMANY

**R.T.A. Deutschland GmbH**
Bublitzer Strasse 34, 40599 Düsseldorf GERMANY
T +49.211.749.668.60 | F +49.211.749.668.66 | info@rta-deutschland.de
**www.rta-deutschland.de**

## INDIA

**R.T.A. INDIA Pvt LTD**
SCMC House, 16/6, 3rd Floor
Vishal Nagar Road - Pimple Nilakh
Pune 411 027 - Maharashtra INDIA
T +91 9422507445 | info@rta-india.in
**www.rta-india.in**


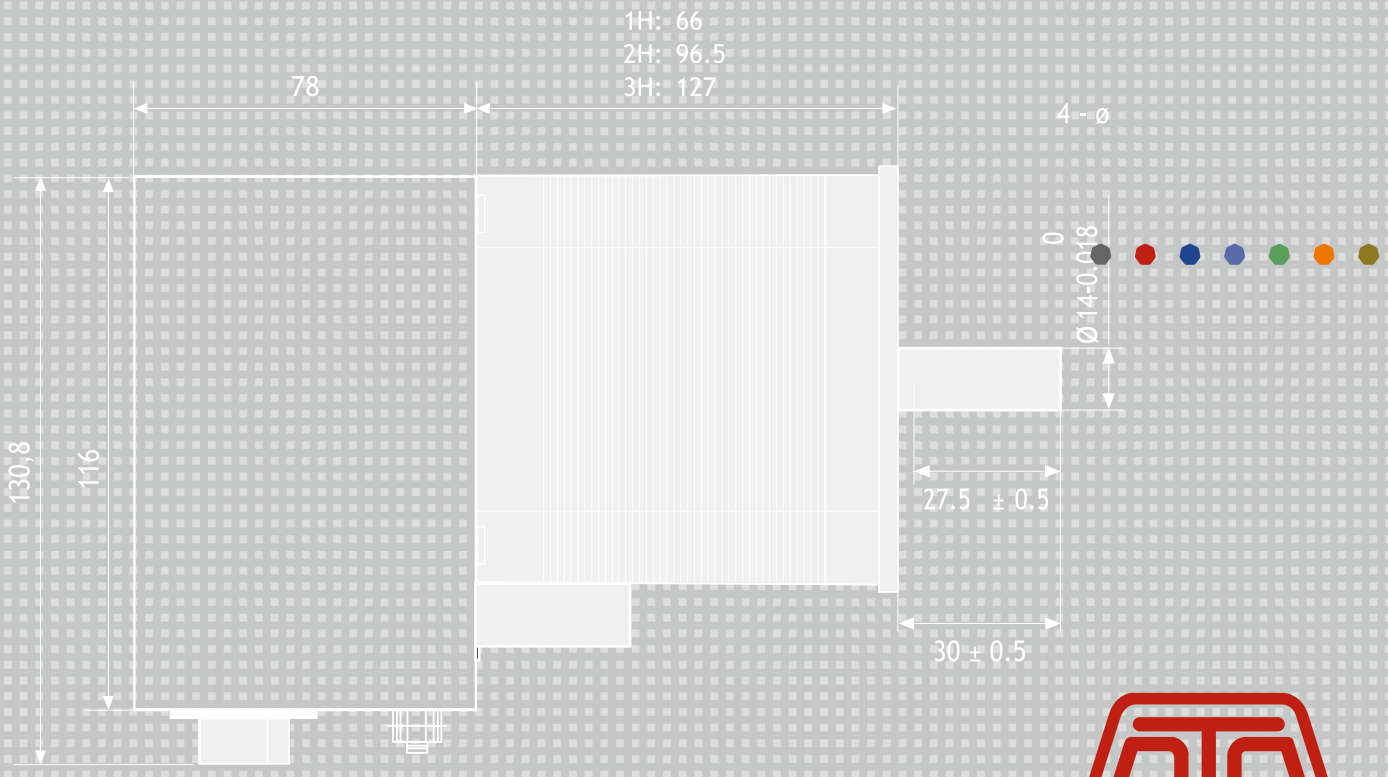


NEWS_EN_MAY_25

Look Ahead!