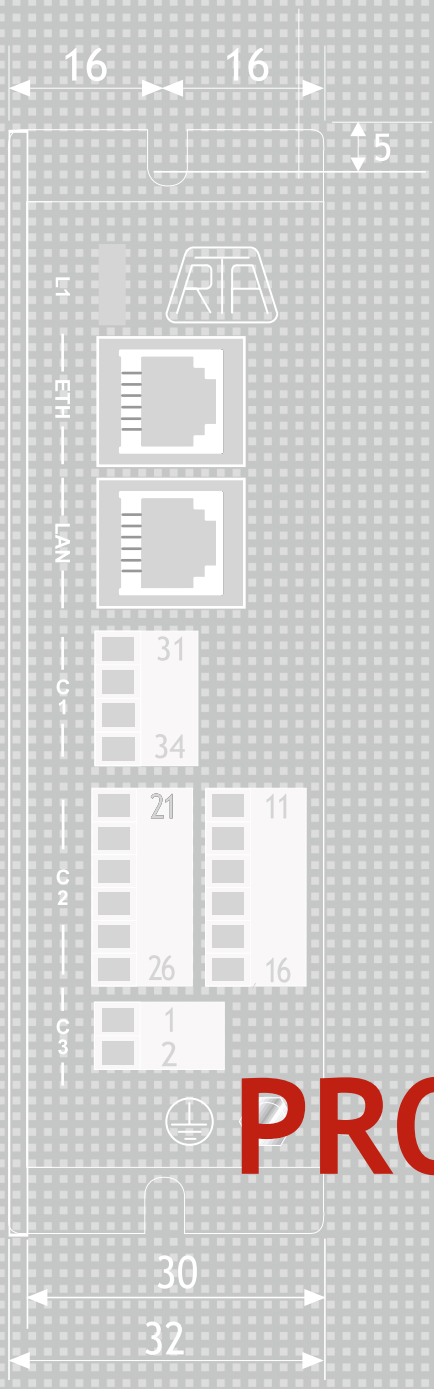

2025

PRODUCT NEWS

Look Ahead!

TABLE OF CONTENTS

	MOTION CONTROLLERS	
	EtherCAT PLC	
	MiniMax Series	4
	I/O device	
	IOT D8.8	6
	HMI	
	C7H	7
	C10S	7
	TS Series	8
	SAFETY PLC	
	R1.190.1310.0	10
	STEPPING MOTOR DRIVES	
	CSD HT Series	14
	CSD MT Series	16
	CSD ET Series	18
NEW!	CSD MS8 / MS8.P	20
	X-PLUS AS4 / AS4.P	22
	X-PLUS MS4 / MS4.P	24
	X-PLUS RS4	26
	R-MOD ET Series	28
	HI-MOD ETS Series	30
	ACCESSORIES	
	Switching Power Supplies	
	R- UHP 1000-48	34
	STEPPING MOTORS	
	Nema 17	
	RH 1S1H (-RS)	38
	RH 1S2H (-RS)	39
	RH 1S3H (-RS)	40
	RH 1S1H -0XX0	41
	RH 1S2H -0XX0	42
	RH 1S3H -0XX0	43
	SS2422-5041	44
	SS2421-5041	45
	Nema 23	
	RH 2S1M (-RS)	46
	RH 2S2M (-RS)	47
	RH 2S1M-0XX0	48
	RH 2S2M-0XX0	49
NEW!	***Nema 34 with absolute encoder***	
	RM 3T1M-00HT	50
	RM 3T2M-00HT	51
	RM 3T3M-00HT	52
	Encoder version	
	EM 6H1M-0XX0	53
	ACCESSORIES	
	Front brakes	
	FB-M12-17-02-00000	56
	FB-M12-23-08-00000	57
	SERVO SYSTEMS	
	SERVO DRIVES	
NEW!	GADWA22AH14	60
	GADWA33AH14	60
	GADSA03AH24	62
	RS3A05A2HAE	64
	RS3A10A2HAE	64
	SERVO MOTORS	
	R2AA13200LXR00M (R2AA13200LCR00M)	66
	R2CA18350LXR00M (R2AA18350LCR00M)	67
	R2CA18450HXR00M (R2CA18450HCR00M)	68
	R2AA18750HCR00M	69
	R2CA2215KVCH00M	70
NEW!	GAM1AA150F0XRB3	71
	GAM2A4010F0XRK2 (GAM2A4010F0CRK2)	72
	GAM2A6020F0XRK2 (GAM2A6020F0CRK2)	73
	GAM2A6040F0XRK2 (GAM2A6040F0CRK2)	74
	GAM2A8075F0XRK2 (GAM2A8075F0CRK2)	75
	GAM2A9100H0XRK2 (GAM2A9100H0CRK2)	76
	GAM2AA10150B0XNB3 (GAM2AA10150B0CNB3)	77
	GAM2AA150B0XRB3 (GAM2AA150B0CRB3)	78
	PLANETARY GEARBOXES	
	SG-P11-120-025-15-SM-286X-00000	80
	COOLING FANS	
	9G1224H102	82



MOTION CONTROLLERS

MiniMax Series EtherCAT PLC

INTRODUCTION

MiniMax is an EtherCAT PLC designed for easy configuration and programming of stepper and servo drives. It allows to develop EtherCAT automation solutions ranging from basic to medium complexity. With an additional LAN port featuring a Modbus TCP/IP server protocol, it can be easily integrated with HMIs, third party PLCs, Industrial Pcs and other network devices.

HIGHLIGHTS

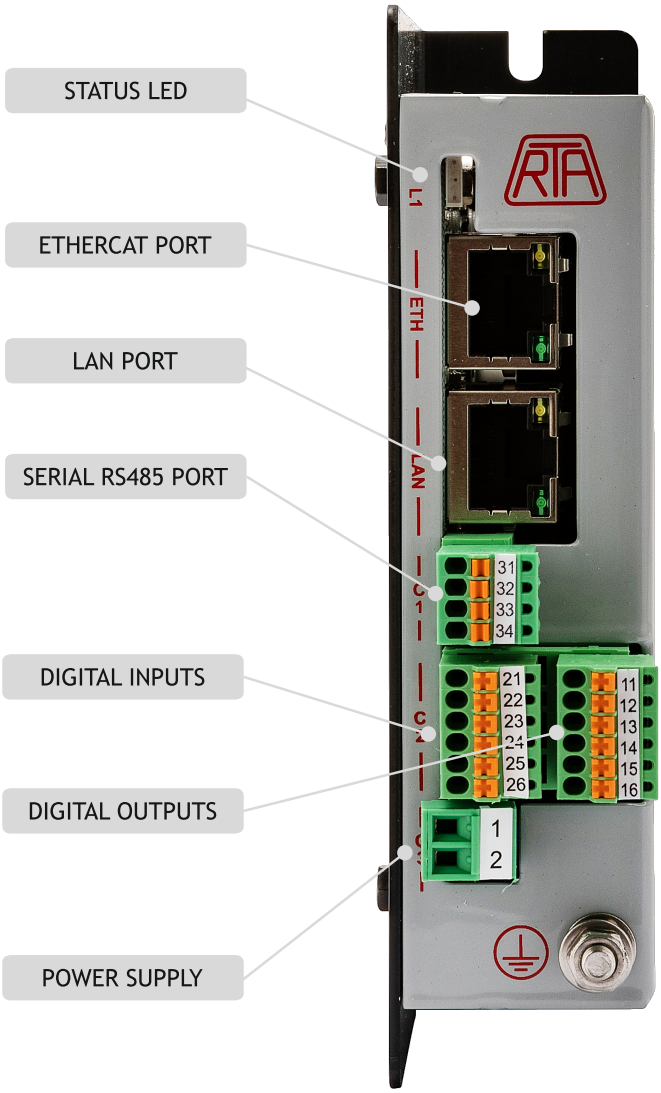

- RTA Studio: unique software environment for configuration and debugging
- Smart Structured Text programming language with built-in function libraries
- Full RTA and SANYO DENKI EtherCAT drives compatibility
- Easy integration with other automation systems by Modbus TCP/IP, UDP and Modbus RTU
- Up to 20 realtime parallel processes
- Compact Size: 32x130x106 mm
- Advanced Axes Motion Interpolation
- 5 Digital Inputs + 5 Digital Outputs
- **RTA Wiki** platform available for further technical insights

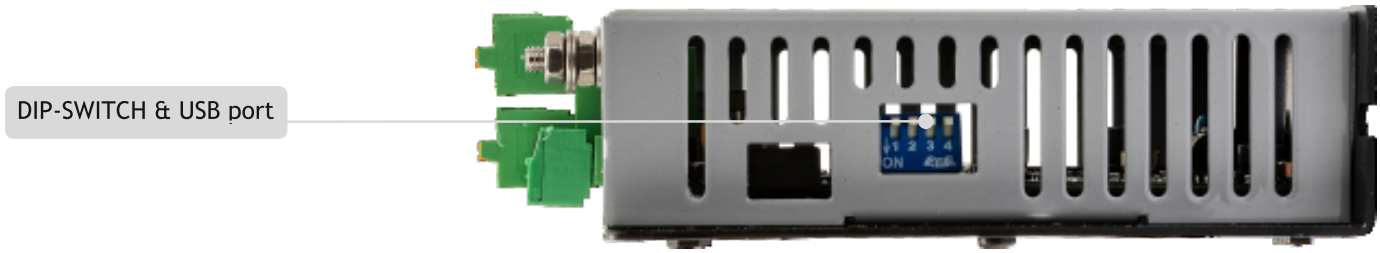

MiniMax versions comparison

MiniMax A1	MiniMax R2
8 basic axes*	20 basic axes
2 advanced axes▲	20 advanced axes

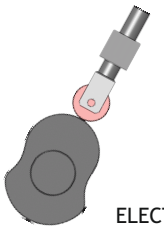

ELECTRICAL CAMS MANAGEMENT

* Basic axes: point to point movements and homing (CSP mode of operation)
▲ Advanced axes: advanced axes interpolation, mechanical cam, gears and links

MiniMax Development Environment

Complete integrated environment for Microsoft Windows

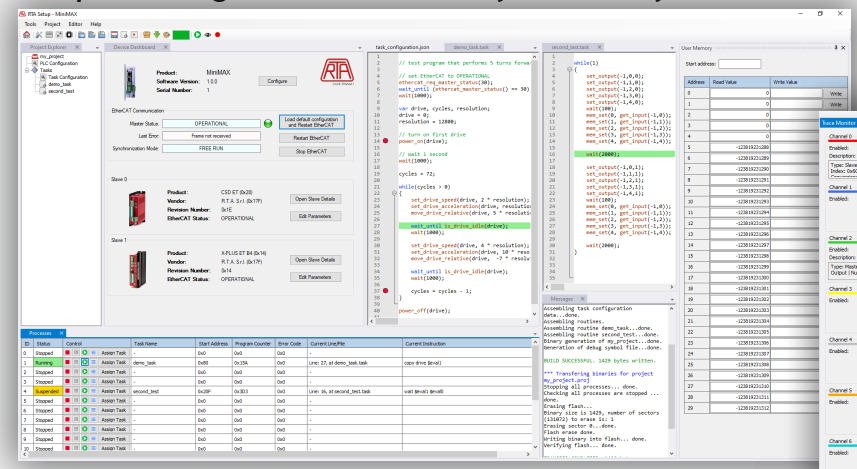

Trace monitoring of automation process parameters

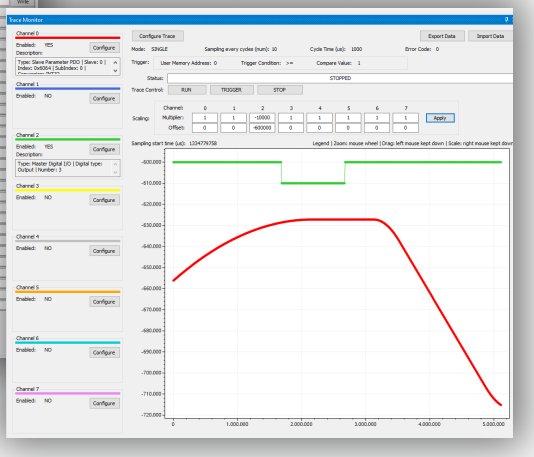

Easy programming language and debugging tools

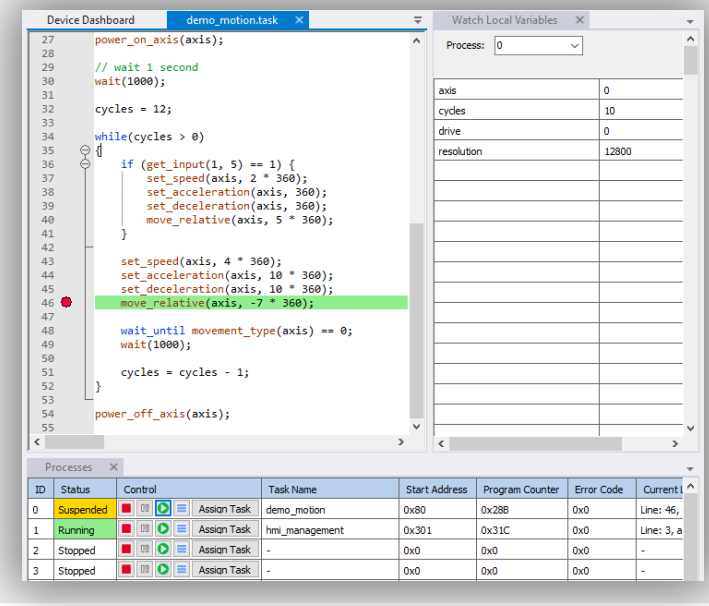

Quick Axis settings and testing setup

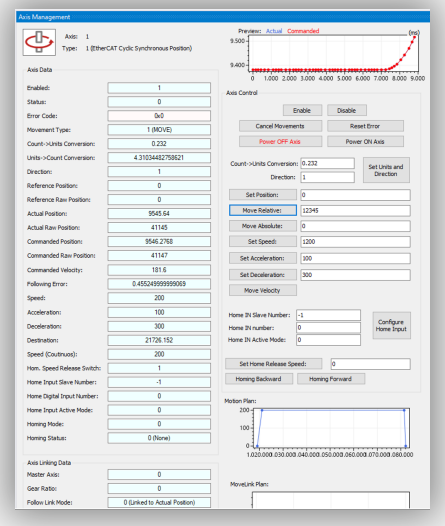

MiniMax Series

Download the MiniMax Series full Datasheet

IOT ET D8.8 Module

The IOT module manages digital inputs/outputs, with integrated LED indication to display its status.

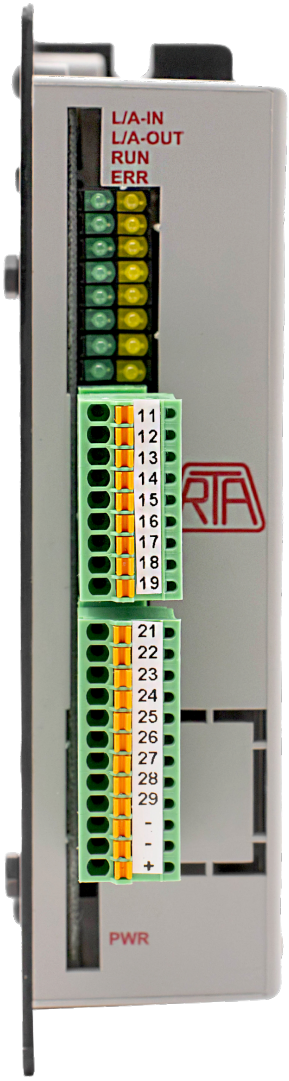

HIGHLIGHTS

- It receives digital logic commands, detect digital inputs status and controls digital outputs.
- EtherCAT interface
- RTA's EtherCAT PLC *MiniMax* expansion or stand-alone unit
- 8 digital input
- 8 digital bi-directional output
- Power supply: 24 VDC
- Protections Over-Voltage and Shortcircuit for outputs

R.T.A. *MiniMax* SYSTEM EXAMPLE

UP TO 20 STEPPER & SERVO AXES

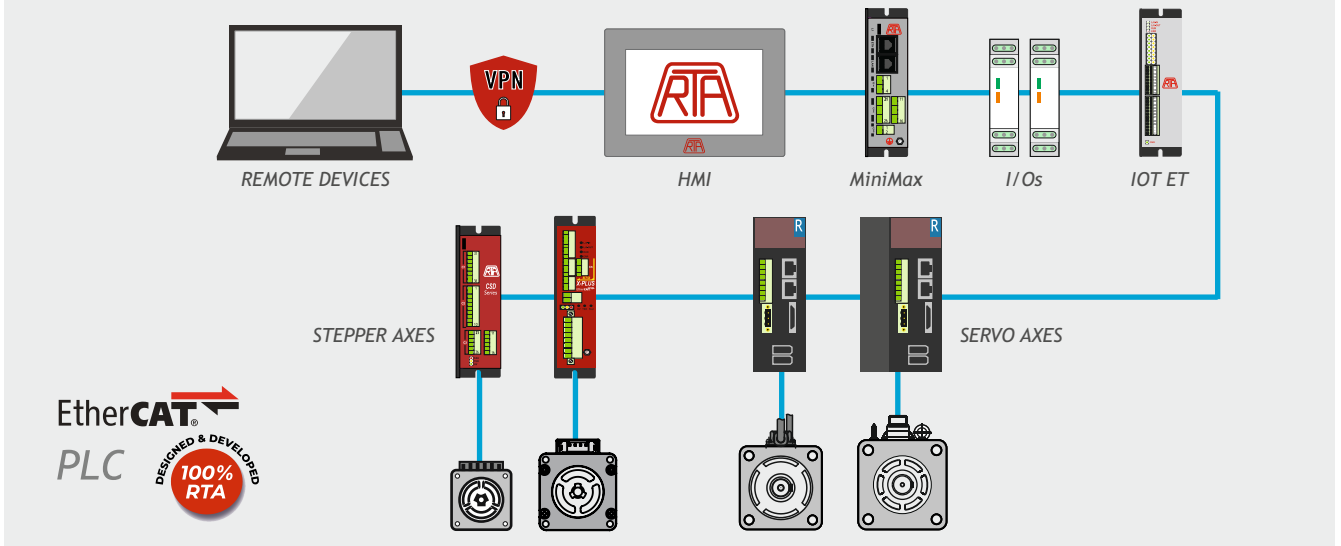

HMI *Touch Screen C7H - C10S*

MAIN FEATURES

- 2 serial ports, 2 USB ports, SD card
- Compact size for easy installation
- R.T.A. support team

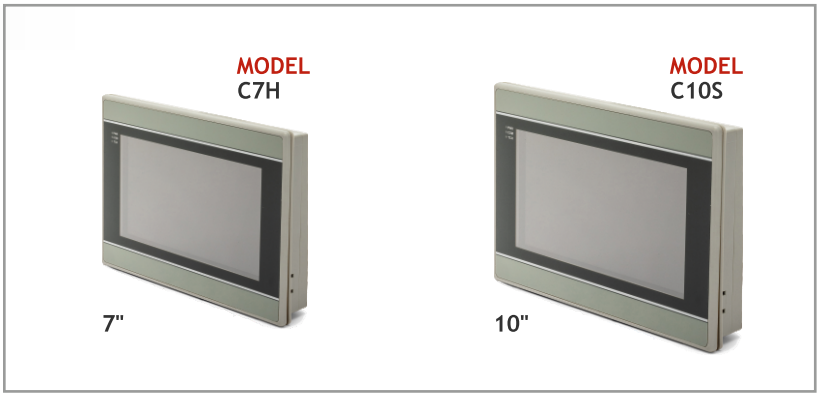

TECHNICAL SPECIFICATIONS

MODEL		C7H	C10S
DISPLAY	DISPLAY	7"	10.1"
	RESOLUTION	1024x600 pixels	1024x600 pixels
MEMORY	FLASH	4 Gb	
	RAM	512 Mb	
DIMENSIONS	DIMENSION	200x146x37 mm	270x212x35 mm
	WEIGHT	0.8 Kg	1.3 Kg
POWER	POWER CONSUMPTION	24±20% VDC	
	INPUT POWER	7 W	10 W

MECHANICAL DIMENSIONS (mm)

Model C7H

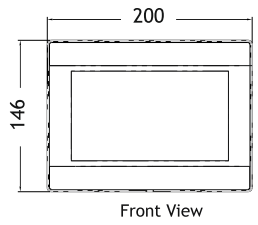

Front View

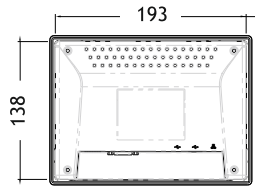

Rear View



Bottom View

Model C10S

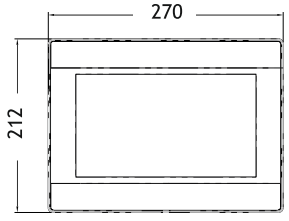

Front View

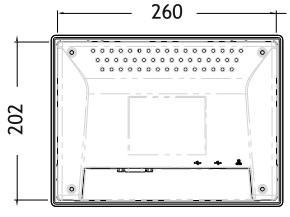

Rear View

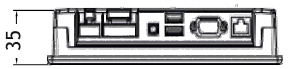

Bottom View

HMI Touch Screen - TS series

NEW Tech Specs

MAIN FEATURES

- Four models in two sizes
- Free developer tools
- Optional remote control (VPN)
- Easy integration with R.T.A. products
- R.T.A. support team

			NEW MODEL 	NEW MODEL 	NEW MODEL 
	MODEL	TS-07-IP-B-08072	TS-07-CMT-A-02078X	TS-07-CMT-A-03072XH2	TS-10-CMT-A-03092X
SOFTWARE FEATURES	*BASE FUNCTIONS	■	■	■	■
	**ADVANCED FUNCTIONS		■	■	■
	PLC TAG EMBEDDED IN PROJECT	■	■	■	■
	OPC SERVER			■	■
	EXTERNAL DATABASE			■	■
	SUPPORT				
REMOTE CONTROL	EASY ACCESS 2.0 (CRZACEA020)	/	Optional	Optional	Optional
I/O PORT	ETHERNET	10/100 Base-T x 1	10/100 Base-T x 2	10/100 Base-T x 2	10/100 Base-T x 1 10/100/1000 Base-T x 1

*Base functions: Picutres/ Sharpe Library embedded in project, Enhanced Security Mode, VNC Server, Circular Trend Display, Combo Button, Operation Log, OPC UA Client, Picture Viewer, Recipe Database / Reciper View

**Advanced functions: e-Mail, Media Player, MQTT (Publisher / Subscriber), USB Camera, IP Camera, VNC Viewer,

HOW THE REMOTE CONTROL WORKS

EasyAccess 2.0 enables the operator to easily connect and monitor the remote HMI from anywhere in the world, through a protected remote VPN connection.

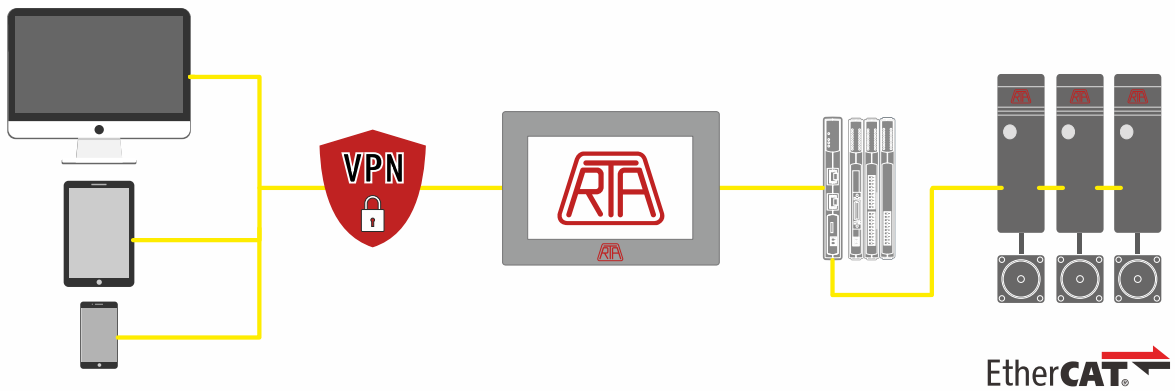

ADVANCED SPECIFICATIONS

MODEL		TS-07-IP-B-08072	TS-07-CMT-A-02078X	TS-07-CMT-A-03072XH2	TS-10-CMT-A-03092X
DISPLAY	DISPLAY	7" TFT	7" TFT	7" TFT	9.7" TFT
	RESOLUTION	800x480	800x480	1024x600	1024x768
	BACKLIGHT LIFE TIME	>30,000 hrs.	>30,000 hrs.	>25,000 hrs.	>30,000 hrs.
MEMORY	FLASH	256 Mb	4 Gb	4 Gb	4 Gb
	RAM	128 Mb	1 Gb	1 Gb	1 Gb
PROCESSOR		Dual-core RISC	Quadcore RISC	Quadcore RISC	Quadcore RISC
I/O PORT	USB HOST	USB 2.0 x 1	USB 2.0 x 1	USB 2.0 x 1	USB 2.0 x 1
	COM PORT	COM1 RS-232, COM2 RS-485 2W/4W	COM2 RS-485 2W/4W, COM3 RS-485 2W	COM2 RS-485 2W/4W, COM3 RS-485 2W CAN Bus	COM2 RS-485 2W/4W, COM3 RS-485 2W CAN Bus
		/	COM1 RS-232 4W, COM3 RS-232 2W	COM1 RS-232 4W, COM3 RS-232 2W	COM1 RS-232 4W, COM3 RS-232 2W
RTC		Built-in	Built-in	Built-in	Built-in
CERTIFICATE		CE	CE/UL	CE/UL	CE/UL
DIMENSIONS	DIMENSIONS WxHxD	200.4 x 146.5 x 34 mm	200.3 x 146.3 x 35 mm	200.3 x 146.3 x 35 mm	260.6 x 203.1 x 44.5 mm
	PANEL CUTOUT	192 x 138 mm	192 x 138 mm	192 x 138 mm	250 x 192 mm
ENVIROMENT	PROTECTION STRUCTURE	NEMA4 / IP65 Compliant Front Panel	UL Type 4X (indoor use only)/ NEMA4/ IP66 Compliant Front Panel	UL Type 4X (indoor use only)/ NEMA4/ IP66 Compliant Front Panel	UL Type 4X (indoor use only)/ NEMA4/ IP66 Compliant Front Panel
POWER	INPUT POWER	24 ± 20% VDC	24 ± 20% VDC	24 ± 20% VDC	24 ± 20% VDC
	POWER CONSUMPTION	450 mA at 24VDC	820 mA at 24VDC	850 mA at 24VDC	1 A at 24 VDC
	POWER ISOLATION	Built-in	Built-in	Built-in	Built-in

MECHANICAL DIMENSIONS (mm)

Model TS-07-IP-B-08072

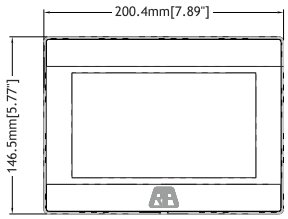

Front View

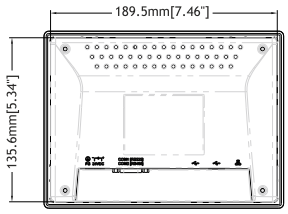

Rear View

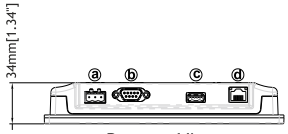

Bottom View

Model TS-07-CMT-A-03072XH2
TS-07-CMT-A-02078X

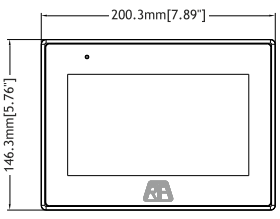

Front View

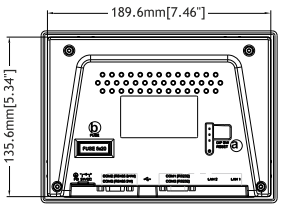

Rear View

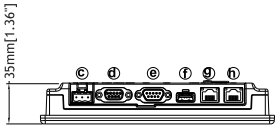

Bottom View

Model TS-10-CMT-A-03092X

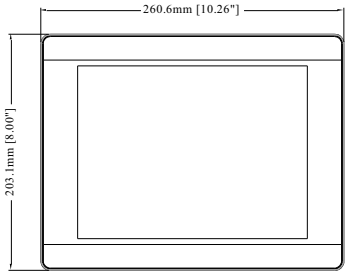

Front View

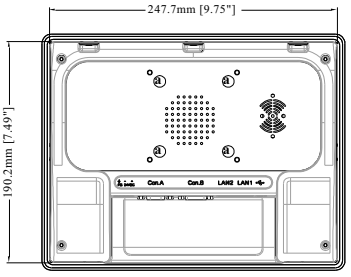

Rear View

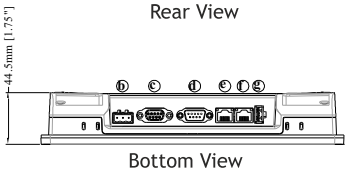

Bottom View

SAFETY PLC *Wieland R1.190.1310.0*

INTRODUCTION

The samosPRO Compact module is suitable for monitoring safety sensors, emergency STOP buttons, safety door switches and door locks, safety light curtains and laser scanners.



HIGHLIGHTS

- 16 safe input, 4 safe output
- 4 configurable I/Os
- Mini-USB and Ethernet ports
- Modbus TCP/IP comunication
- Easy integration in the R.T.A. system

R.T.A. SAFETY PLC SYSTEM

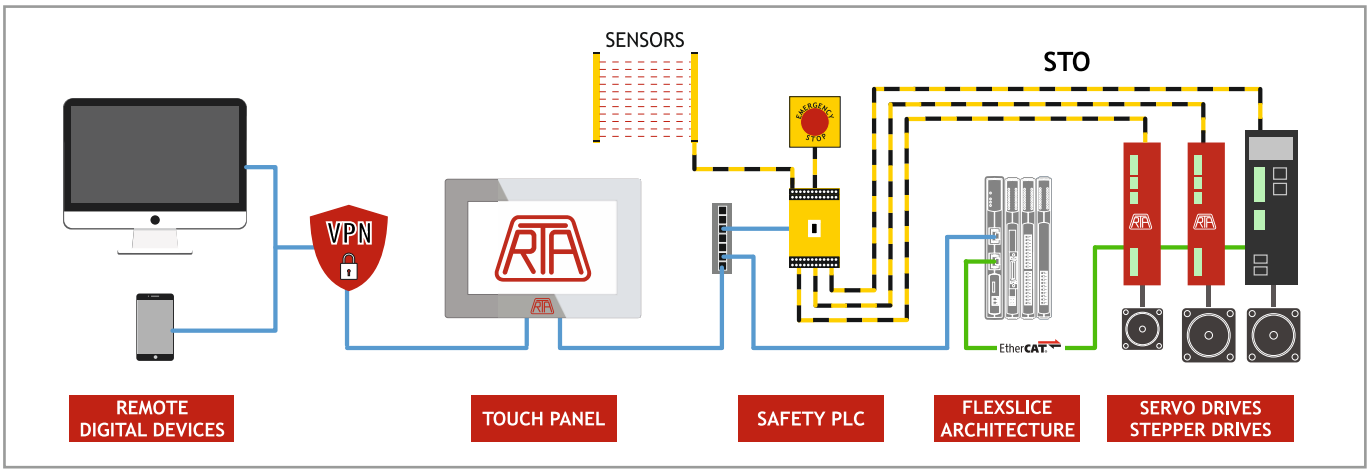

MAIN FEATURES

GENERAL FEATURES	
TYPE OF PROTECTION (ACCORDING TO DIN 60529)	IP20
NORMATIVE	EN 62508, EN 62061, EN ISO 13849-1, EN 50156, EN 81-1
CERTIFICATIONS	TUV, UL

SAFETY PARAMETERS	
CATEGORY (ISO 13849-1)	4
PL (ISO 13849-1)	Level e
SIL_{CL} (IEC 62061)	3
HFT	1
T_M	20 a

TECHNICAL SPECIFICATIONS

POWER CIRCUIT	
OPERATING VOLTAGE RANGE	24 VDC -30%/+25%
NOMINAL POWER	3,5 W (Logic absortion)

INPUT CIRCUIT	
DIGITAL INPUTS	16 + 4 Configurable
INPUT VOLTAGE RANGE	15 VDC up to 30 VDC
NOMINAL CURRENT	2 mA

OUTPUT CIRCUIT	
DIGITAL OUTPUTS	4 + 4 Configurable
OUTPUT VOLTAGE RANGE	24 VDC
OUTPUT CURRENT I_n PER OUTPUT	4 A (I_{sum} 16 A)

INTERFACE CIRCUIT	
ETHERNET INDUSTRIAL PROTOCOLS	Modbus TCP/IP
PROGRAM MEMORY	Esternal (Mandatory pairing with SD WIELAND R1.190.1000.00)

SAFETY FUNCTIONS

- ✓ Contactless operating selection function
- ✓ Control function of external contactors
- ✓ Contemporaneity button function
- ✓ Operation mode selection function
- ✓ Block restart funtion
- ✓ Bimanual function
- ✓ Safety function
- ✓ Access control function
- ✓ ON/OFF Delay timer

MECHANICAL DIMENSIONS (mm)

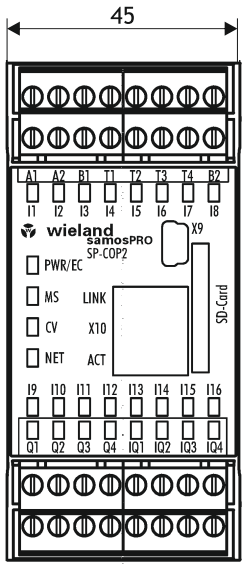

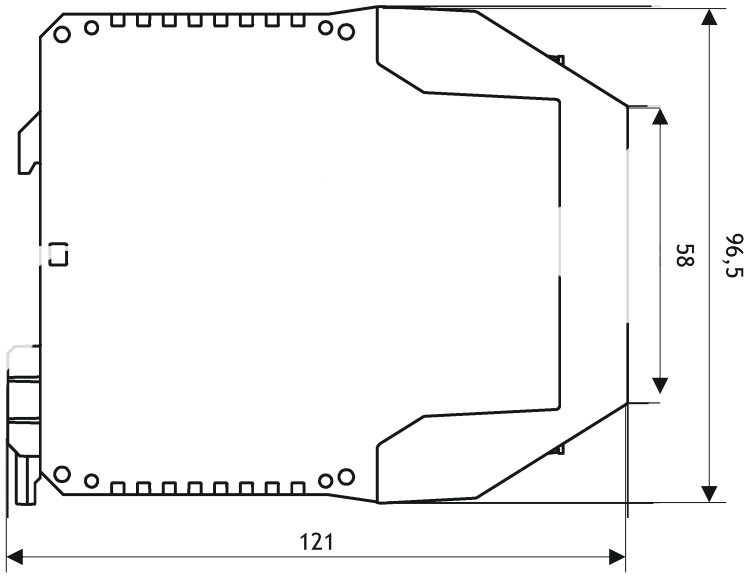



STEPPING MOTOR DRIVES

CSD HT Series Drives

EtherNet/IP™

INTRODUCTION

- New series of stepping motor drives with EtherCAT interface, now available with a 4th generation firmware release and extended current and voltage range.
- Drives optimized for coupling with SANYO DENKI stepping motors, fitted with encoder, but also able to manage third party motors.
- Also available with other interfaces:

EtherCAT Modbus TCP/IP

AUTO-FEED

AUTO-FEED is a closed loop function with:
- Very simple tuning
- Lower power consumption and heating

MAIN FEATURES

- Modes of operation: Profile Position, Profile Velocity and Homing.
- Wide range of motor phase current setting and motor current overboost:
  - 120% for CSD ET 94/S4 models
  - 140% for CSD ET S8 models.

CURRENT OVERBOOST +140%

- Control of different motors sizes:
  - Up to Nema 24 for CSD ET 94/S4 models
  - Up to Nema 34 for CSD ET S8 models. NEW!
- Different variety of HOMING operation modes.
- Encoder feedback and support of different resolution.
- Touch Probe function available.
- Limit switches management.
- 2 + 3 I/Os.

EXTENDED VOLTAGE & CURRENT RANGE

4th FIRMWARE GENERATION



c UL us

AUTO FEED FUNCTION

AUTO SYNC FUNCTION

STO FUNCTION FEATURES

- Safe Torque Off (STO) function - SIL3
- Error Detection Monitor

SIL3 SAFE TORQUE OFF (STO)

Please refer to download.rta.it for technical specifications

Series	Model	V_{DC} range	I nom.	I boost	Digital In/Out	Dimensions
		(Volt)	(Amp)	(Amp)		(mm)
CSD HT	S8 STO	24 to 85	6.0	8.4	2/3	130x106x32
CSD HT	S4 STO	24 to 48	4.0	4.8	2/3	130x106x32

CURRENT OVERBOOST +140%

TECHNICAL FEATURES

- Range of operating voltage:
  - 24-48 VDC for CSD HT S4 models
  - 24-85 VDC for CSD HT S8 models.
- Protections:
  -Protection against under-voltage and over-voltage
  -Protection against a short-circuit at motor outputs
  -Overtemperature protection.
- Electronic damping facility for further acoustic noise and mechanic vibrations reduction.
- Available in plastic boxed version with plug-in connectors.
- Maximum compactness.
- Optoinsulated auxiliary and programmable inputs and outputs.
- Warranty: 24 months.



- A kit for mounting on a DIN rail is available as optional. Code: KNDCGD



POWER AND LOGIC CONNECTIONS

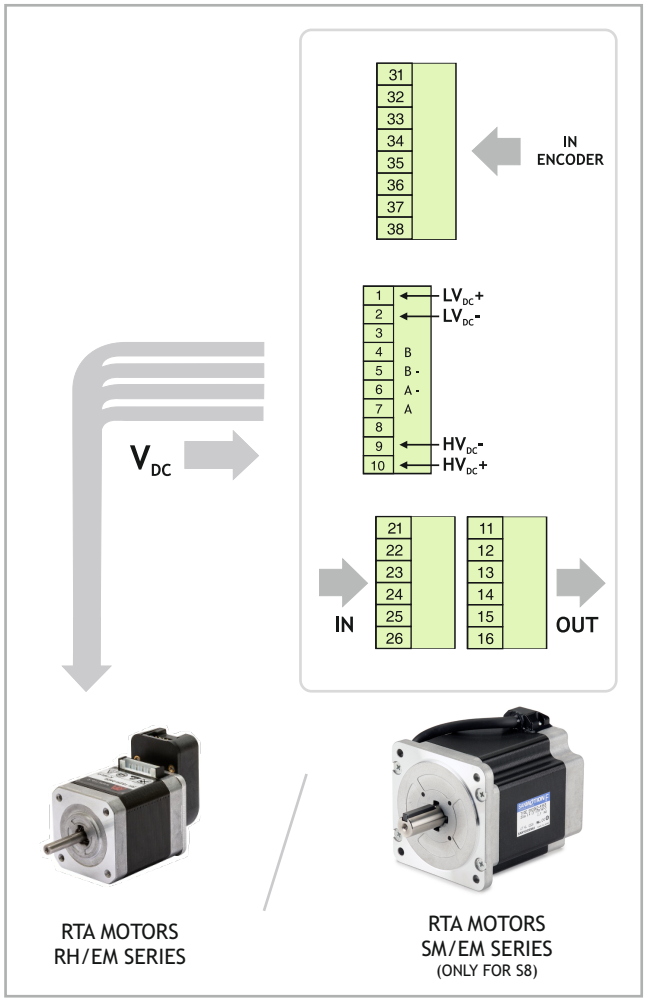

EtherNet/IP™

MECHANICAL DIMENSIONS

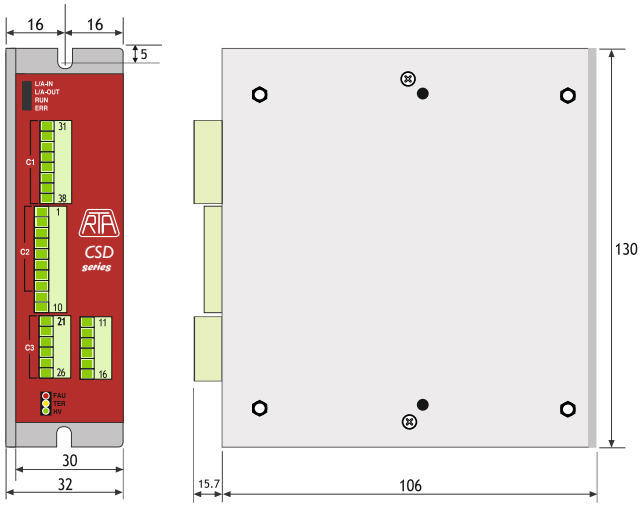

CSD HT
HIGH SIDE VIEW

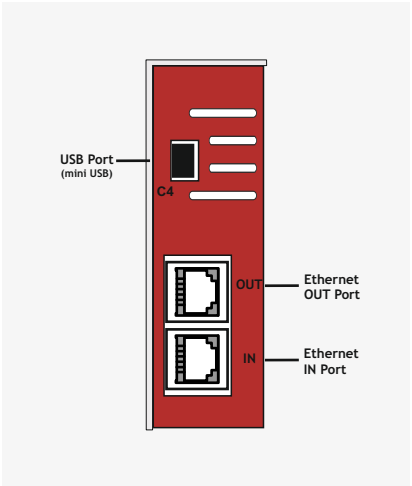

Dimensions in millimeters - Not in scale.

CSD MT Series Drives

Modbus TCP/IP

INTRODUCTION

- New series of stepping motor drives with EtherCAT interface, now available with a 4th generation firmware release and extended current and voltage range.
- Drives optimized for coupling with SANYO DENKI stepping motors, fitted with encoder, but also able to manage third party motors.
- Also available with other interfaces:

EtherNet/IP EtherCAT

AUTO-FEED

AUTO-FEED is a closed loop function with:
- Very simple tuning
- Lower power consumption and heating

MAIN FEATURES

- Modes of operation: Profile Position, Profile Velocity and Homing.
- Wide range of motor phase current setting and motor current overboost:
  - 120% for CSD ET 94/S4 models
  - 140% for CSD ET S8 models.

CURRENT OVERBOOST +140%

- Control of different motors sizes:
  - Up to Nema 24 for CSD ET 94/S4 models
  - Up to Nema 34 for CSD ET S8 models. NEW!
- Different variety of HOMING operation modes.
- Encoder feedback and support of different resolution.
- Touch Probe function available.
- Limit switches management.
- 5 + 5 I/Os (MT 94) and 2 + 3 I/Os (MT S4/S8).

EXTENDED VOLTAGE & CURRENT RANGE

4th FIRMWARE GENERATION



c UL us

AUTO FEED FUNCTION

AUTO SYNC FUNCTION

STO FUNCTION FEATURES

- Safe Torque Off (STO) function - SIL3
- Error Detection Monitor

SIL3 SAFE TORQUE OFF (STO)

Please refer to download.rta.it for technical specifications

Series	Model	V_{DC} range	I nom.	I boost	Digital In/Out	STO	Dimensions
		(Volt)	(Amp)	(Amp)			(mm)
CSD MT	S8 STO	24 to 85	6.0	8.4	2/3	Yes	130x106x32
CSD MT	S4 STO	24 to 48	4.0	4.8	2/3	Yes	130x106x32
CSD MT	94	24 to 48	4.0	4.8	5/5	No	130x106x32

CURRENT OVERBOOST +140%

TECHNICAL FEATURES

- Range of operating voltage:
  - 24-48 VDC for CSD MT 94/S4 models
  - 24-85 VDC for CSD MT S8 models.
- Protections:
  -Protection against under-voltage and over-voltage
  -Protection against a short-circuit at motor outputs
  -Overtemperature protection.
- Electronic damping facility for further acoustic noise and mechanic vibrations reduction.
- Available in plastic boxed version with plug-in connectors.
- Maximum compactness.
- Optoinsulated auxiliary and programmable inputs and outputs.
- Warranty: 24 months.



- A kit for mounting on a DIN rail is available as optional. Code: KNDCGD



POWER AND LOGIC CONNECTIONS

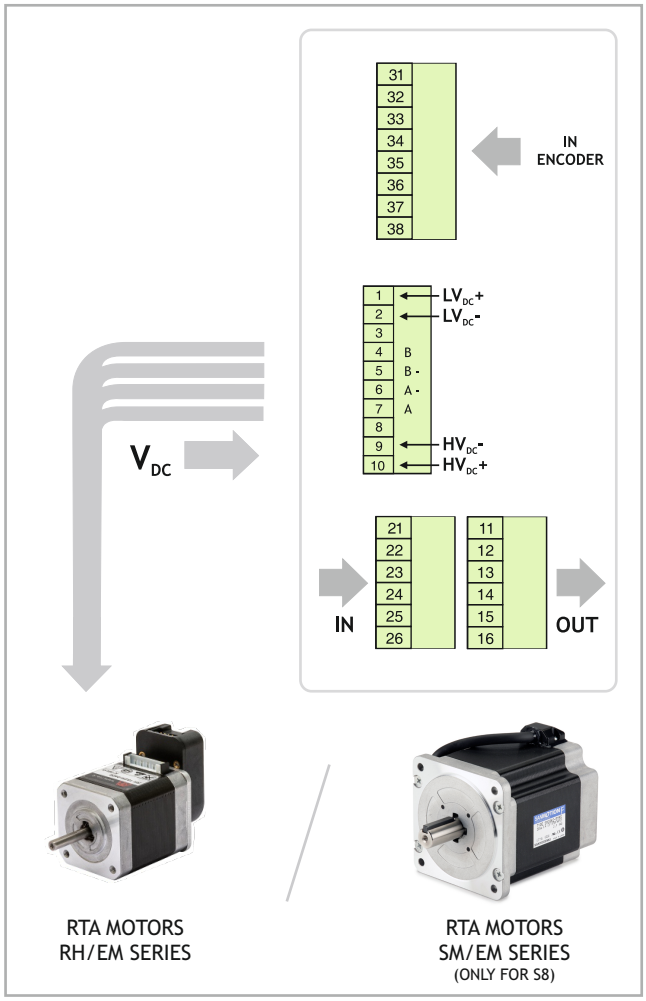

Modbus TCP/IP

MECHANICAL DIMENSIONS

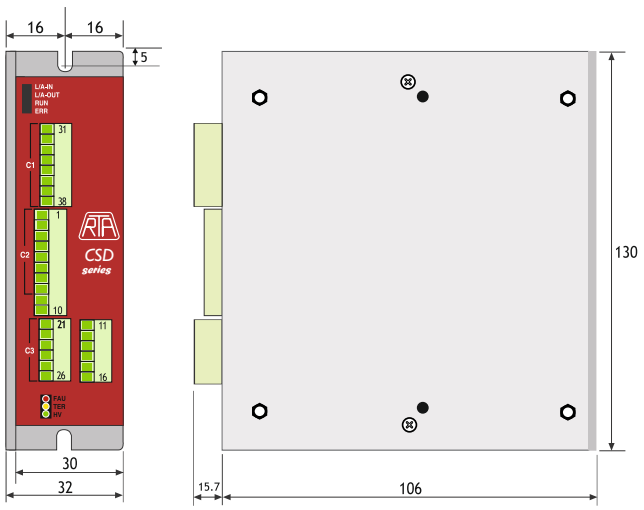

CSD MT
HIGH SIDE VIEW

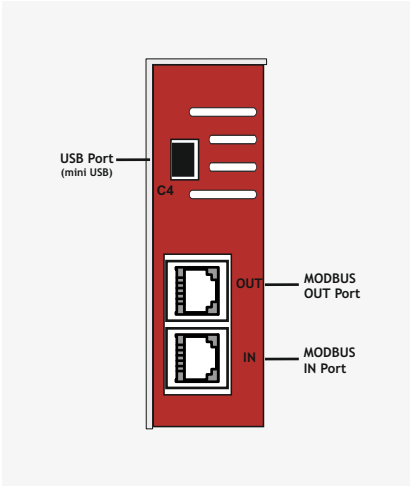

Dimensions in millimeters - Not in scale.

CSD ET Series Drives

EtherCAT®

INTRODUCTION

- New series of stepping motor drives with EtherCAT interface, now available with a 4th generation firmware release and extended current and voltage range.
- Drives optimized for coupling with SANYO DENKI stepping motors, fitted with encoder, but also able to manage third party motors.
- Also available with other interfaces:

EtherNet/IP Modbus TCP/IP

AUTO-FEED

AUTO-FEED is a closed loop function with:
- Very simple tuning
- Lower power consumption and heating

EXTENDED VOLTAGE & CURRENT RANGE

4th FIRMWARE GENERATION



MAIN FEATURES

- Modes of operation: Profile Position, Profile Velocity, Homing, CSP and CSV.
- Wide range of motor phase current setting and motor current overboost:
  - 120% for CSD ET 94/S4 models
  - 140% for CSD ET S8 models.

CURRENT OVERBOOST +140%

- Control of different motors sizes:
  - Up to Nema 24 for CSD ET 94/S4 models
  - Up to Nema 34 for CSD ET S8 models. NEW!
- Different variety of HOMING operation modes.
- Encoder feedback and support of different resolution.
- Touch Probe function available.
- Limit switches management.
- 5 + 5 I/Os (ET 94) and 2 + 3 I/Os (ET S4/S8).

c UL us

AUTO FEED FUNCTION

AUTO SYNC FUNCTION

STO FUNCTION FEATURES

- Safe Torque Off (STO) function - SIL3
- Error Detection Monitor

SIL3 SAFE TORQUE OFF (STO)

Please refer to download.rta.it for technical specifications

Series	Model	V_{DC} range (Volt)	I nom. (Amp)	I boost (Amp)	Digital In/Out	STO	Dimensions (mm)
CSD ET	S8 STO	24 to 85	6.0	8.4	2/3	Yes	130x106x32
CSD ET	S4 STO	24 to 48	4.0	4.8	2/3	Yes	130x106x32
CSD ET	94	24 to 48	4.0	4.8	5/5	No	130x106x32

CURRENT OVERBOOST +140%

TECHNICAL FEATURES

- Range of operating voltage:
  - 24-48 VDC for CSD ET 94/S4 models
  - 24-85 VDC for CSD ET S8 models.
- Protections:
  -Protection against under-voltage and over-voltage
  -Protection against a short-circuit at motor outputs
  -Overtemperature protection.
- Electronic damping facility for further acoustic noise and mechanic vibrations reduction.
- Available in plastic boxed version with plug-in connectors.
- Maximum compactness.
- Optoinsulated auxiliary and programmable inputs and outputs.
- Warranty: 24 months.



- A kit for mounting on a DIN rail is available as optional. Code: KNDCGD



POWER AND LOGIC CONNECTIONS

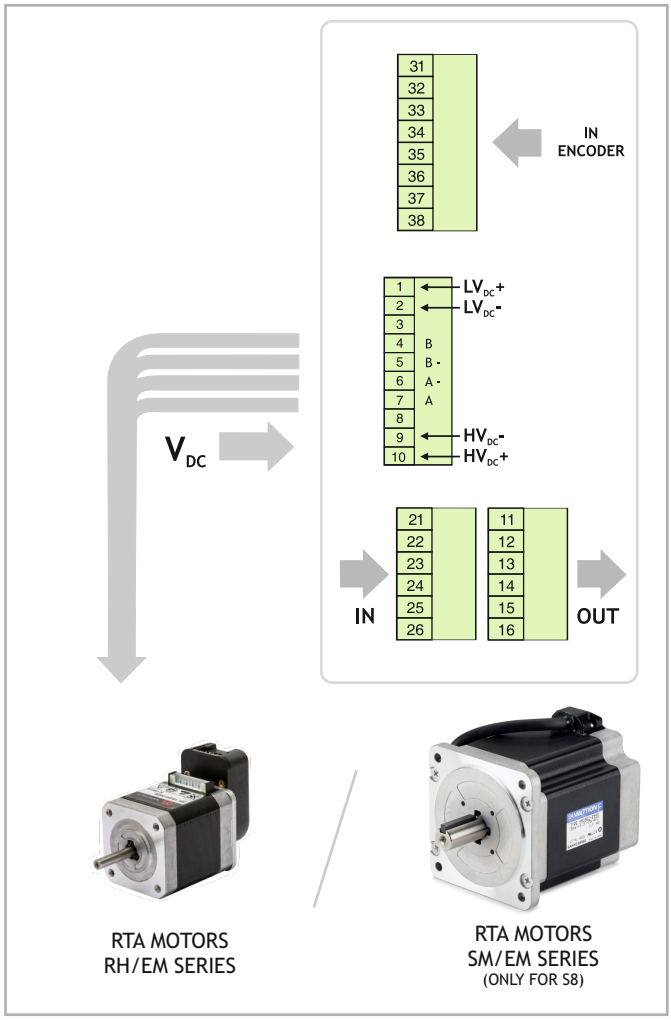

EtherCAT®

MECHANICAL DIMENSIONS

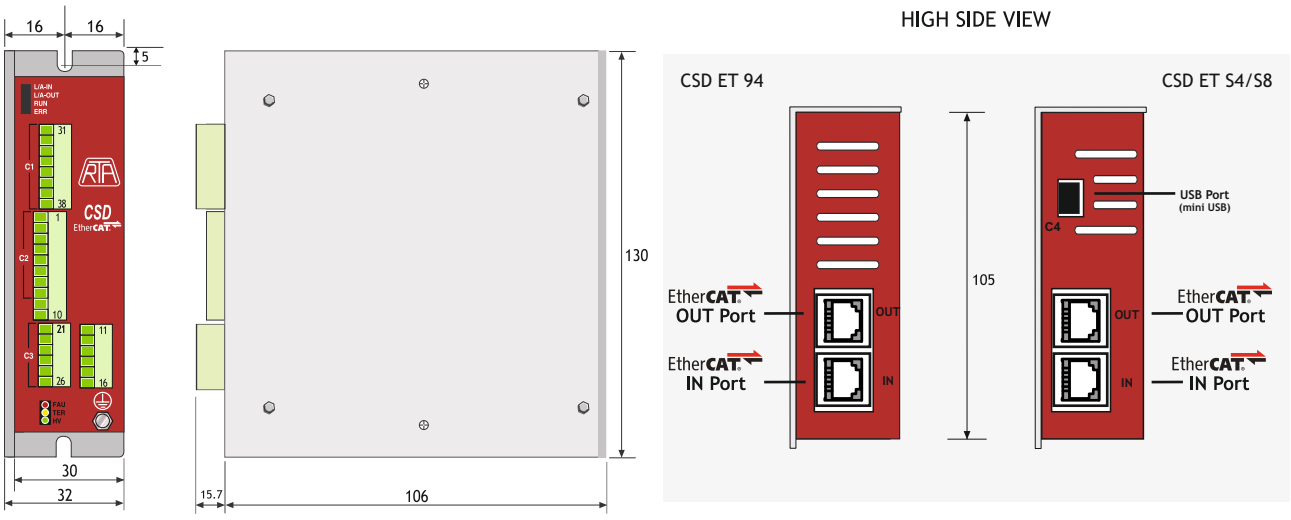

Dimensions in millimeters - Not in scale.

CSD MS8 & CSD MS8.P
Series Drives

Step-Dir EVOLUTION + Modbus RTU

INTRODUCTION

- CSD MS8 is a new model of RTA flagship stepping motor drive with STEP&DIR and Modbus RTU RS-485 interface for application in which low/medium power is required.
- Embedded Auto-Sync and Auto-Feed functions with encoder, featuring a closed loop positioning and motor performance optimization.

AUTO-FEED

AUTO-FEED is a closed loop function with:
- Very simple tuning
- Lower power consumption and heating

MODBUS RTU MAIN FUNCTIONS

- Homing, Position and Velocity mode
- Registers for diagnostics

Modbus RTU

CSD MS8.P *programmable version*

- For simple, single-axis applications
- Possibility to load and execute a single-task program

</>.P



HIGHLIGHTS

- 3 Current Control modes available: Open Loop, Auto-Sync and Auto-Feed.
- Configuration settings, diagnostics and setup via RTA STUDIO for Windows®.
- INPUT and OUTPUT configurable.
- Extended interfaces: STEP&DIR and Modbus RTU.
- Zero index, Proximity Switch and Hard Stop searching function.
- Replied encoder signal output.

c UL us

AUTO FEED FUNCTION

AUTO SYNC FUNCTION

STO FUNCTION FEATURES

- Safe Torque Off (STO) function - SIL3
- Error Detection Monitor

SIL3 SAFE TORQUE OFF (STO)

Please refer to download.rta.it for technical specifications

Series	Model	V_{AC} range	I nom.	I boost	Dimensions
		(Volt)	(Amp)	(Amp)	(mm)
CSD	MS8 / MS8.P	24 to 85	6.0	8.4	130x106x32

TECHNICAL FEATURES

- Range of operating nominal voltage: 24 - 85 Vdc.
- Up to 8.4 Amps motor current setting.
- RS-485 baud rate up to 256000.
- Microstepping: up to 12.800 steps/revolutions.
- Various encoder resolution available.
- Available current reduction at motor standstill.
- Easy wiring with plug-in connectors.
  Maximum compactness.
- Optoinsulated digital I/O to ensure best EM noise immunity.
- Protections:
  -Protection against under-voltage and over-voltage
  -Protection against a short-circuit at motor outputs
  -Overtemperature protection.
  -Open motor/encoder phase.
- Available in plastic boxed version with plug-in connectors.
- Electronic damping facility for further acoustic noise and mechanic vibrations reduction.
- A kit for mounting on a DIN rail is available as optional. Code: KNDCGD
- Warranty: 24 months.

POWER AND LOGIC CONNECTIONS

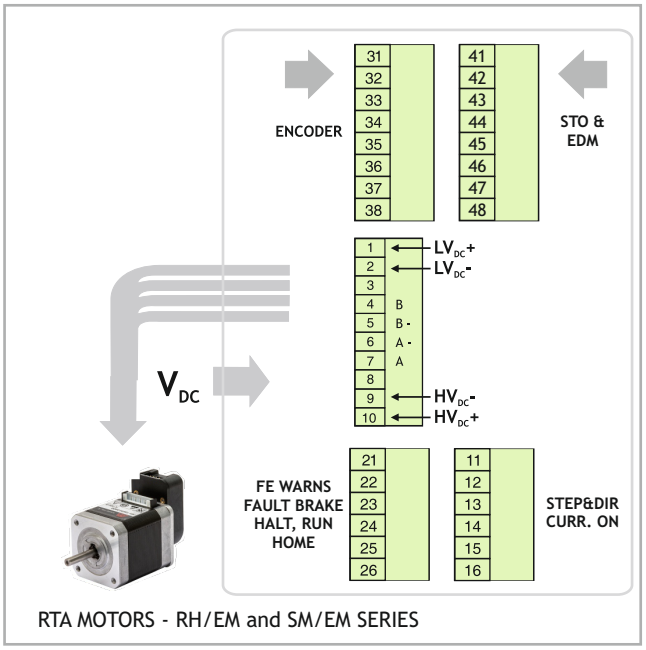

RTA MOTORS - RH/EM and SM/EM SERIES

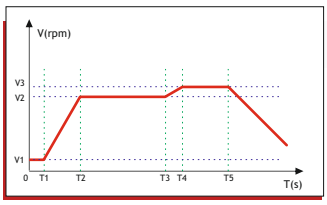

.P drives Motion Profile example

Programmable through RTA Studio IDE

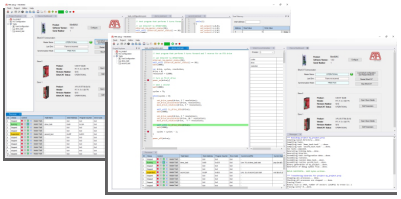

MECHANICAL DIMENSIONS

CSD MS8
HIGH SIDE VIEW

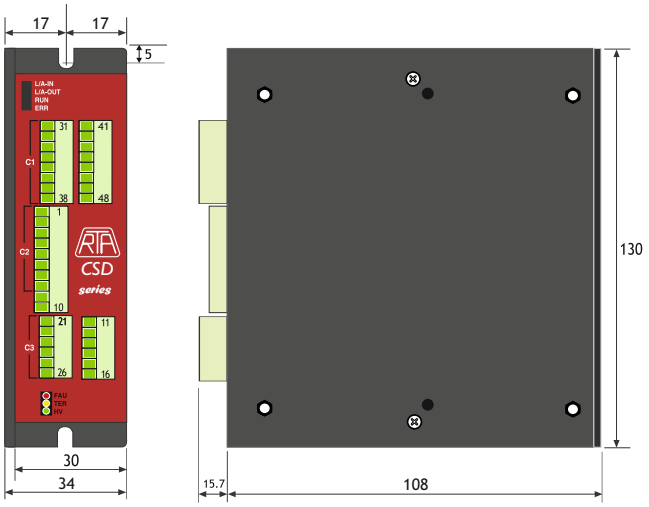

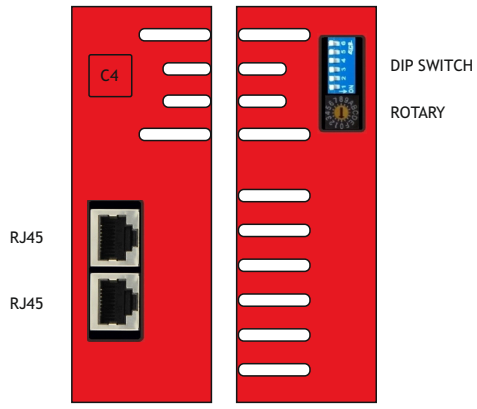

Dimensions in millimeters - Not in scale.

X-Plus AS4 & X-Plus AS4.P

Series Drives

INTRODUCTION

- X-Plus AS4 is a new model of RTA flagship high-power stepping motor drive with STEP&DIR, Analog Input (± 10 Volt) and Modbus RTU RS-485 interface.
- Embedded Auto-Sync and Auto-Feed functions with absolute encoder, featuring a closed loop positioning and motor performance optimization.

HIGHLIGHTS

- 3 Current Control modes available: Open Loop, Auto-Sync and Auto-Feed.
- Configuration settings, diagnostics and setup via RTA STUDIO for Windows®.
- Integrated system for back EMF energy dissipation with optional external resistor.

ABSOLUTE ENCODER MANAGEMENT

- High-precision positioning enabled by battery-less absolute encoders for advanced motion control

BATTERY-LESS ABSOLUTE ENCODER

AUTO-FEED

AUTO-FEED is a closed loop function with:

- Very simple tuning
- Lower power consumption and heating

MODBUS RTU MAIN FUNCTIONS

- Homing, Position and Velocity mode
- Registers for diagnostics

X-Plus AS4.P *programmable version*

- For simple, single-axis applications
- Possibility to load and execute a single-task program

Modbus RTU | Step-Dir EVOLUTION | ANALOG IN ±10 V



SIL3 SAFE TORQUE OFF (STO) | AUTO FEED FUNCTION | AUTO SYNC FUNCTION

Motor coupling

- RM 3T1M-00HT
- RM 3T2M-00HT
- RM 3T3M-00HT

BATTERY-LESS ABSOLUTE ENCODER

ONE OF THE MOST COMPACT DRIVES WITH POWER INPUT DIRECTLY FROM THE MAIN AC SUPPLY (110 - 230 VAC)

Series	Model	V_{AC} range	I nom.	I boost	Dimensions
		(Volt)	(Amp)	(Amp)	(mm)
X-PLUS	AS4 / AS4.P	110 to 230 +/- 15%	4.8	6.0	169x129x46

TECHNICAL FEATURES

- Range of operating nominal voltage: 110-230 V_{AC}.
- Up to 6.0 Amps motor current setting.
- RS-485 baud rate up to 256000.
- Microstepping: 2048, 4096, 16384 and 65536 steps/revolutions.
- INPUT and OUTPUT configurable.
- Protections:

  -Protection against under-voltage and over-voltage
  -Protection against a short-circuit at motor outputs
  -Overtemperature protection with thermal sensor
  -Open motor/encoder phase.
- Automatic current reduction at motor standstill.
- Electronic damping facility for further acoustic noise and mechanic vibrations reduction.
- Easy wiring with plug-in connectors. Maximum compactness.
- Optoinsulated digital I/O to ensure best EM noise immunity.
- Coupling with stepping motors rated for high insulation is mandatory.
  RTA codes: RM 3TxM-00HT x=1, 2, 3
- Warranty: 24 months.

AUTO FEED FUNCTION

AUTO SYNC FUNCTION

WARRANTY 2 YEARS GARANZIA

POWER AND LOGIC CONNECTIONS

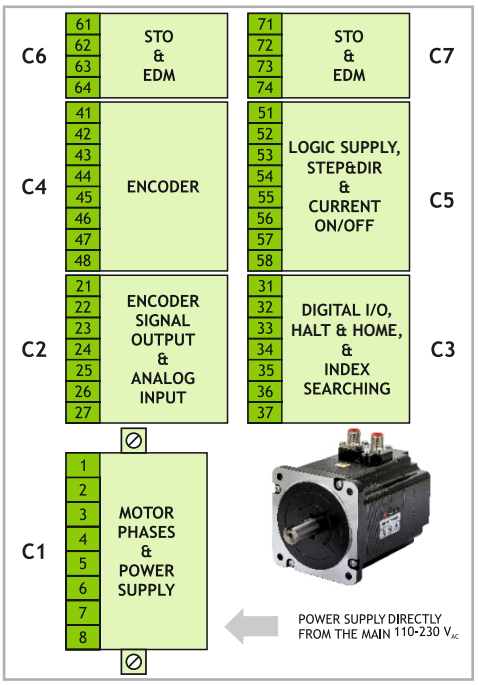

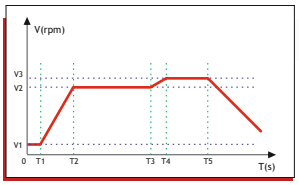

.P drives Motion Profile example

Programmable through RTA Studio IDE

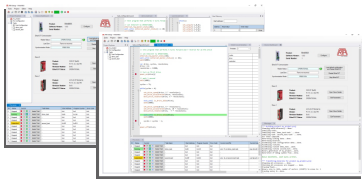

MECHANICAL DIMENSIONS

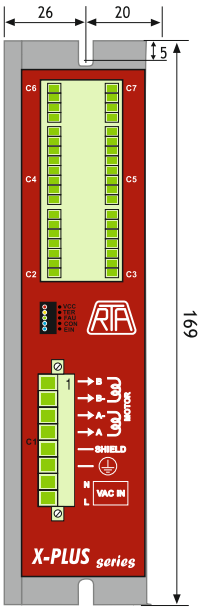

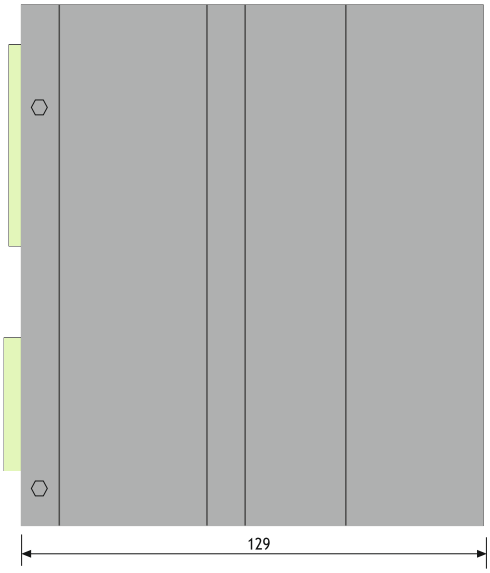

X-PLUS AS4 HIGH SIDE VIEW

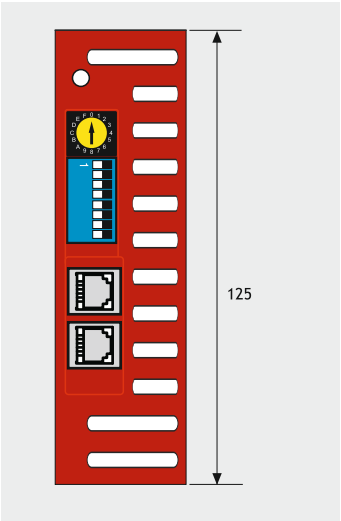

Dimensions in millimeters - Not in scale.

X-Plus MS4 & X-Plus MS4.P

Series Drives

INTRODUCTION

- X-Plus MS4 is a new model of RTA flagship high-power stepping motor drive with STEP&DIR, Analog Input and Modbus RTU RS-485 interface.
- Embedded Auto-Sync and Auto-Feed functions with encoder, featuring a closed loop positioning and motor performance optimization.

Step-Dir EVOLUTION + ANALOG IN ±10 V + Modbus RTU

AUTO-FEED

AUTO-FEED is a closed loop function with:

- Very simple tuning
- Lower power consumption and heating

MODBUS RTU MAIN FUNCTIONS

- Homing, Position and Velocity mode
- Registers for diagnostics

Modbus RTU

X-Plus MS4.P *programmable version*

- For simple, single-axis applications
- Possibility to load and execute a single-task program

</>.P

HIGHLIGHTS

- 3 Current Control modes available: Open Loop, Auto-Sync and Auto-Feed.
- Configuration settings, diagnostics and setup via RTA STUDIO for Windows®.
- Extended interfaces: STEP&DIR, Analog Input velocity setpoint (± 10 Volt) and Modbus RTU.
- Integrated system for back EMF energy dissipation with optional external resistor.
- Zero index, Proximity Switch and Hard Stop searching function.
- Replied encoder signal output.



AUTO FEED FUNCTION

AUTO SYNC FUNCTION

STO FUNCTION FEATURES

- Safe Torque Off (STO) function - SIL3-PIe
- Error Detection Monitor (EDM) output

SIL3 SAFE TORQUE OFF (STO)

ONE OF THE MOST COMPACT DRIVES WITH POWER INPUT DIRECTLY FROM THE MAIN AC SUPPLY (110 - 230 VAC)

Series	Model	V_{AC} range	I nom.	I boost	Dimensions
		(Volt)	(Amp)	(Amp)	(mm)
X-PLUS	MS4 / MS4.P	110 to 230 +/- 15%	4.8	6.0	169x129x46

TECHNICAL FEATURES

- Range of operating nominal voltage: 110-230 V_{AC}.
- Up to 6.0 Amps motor current setting.
- RS-485 baud rate up to 256000.
- Microstepping: 400, 800, 1600, 3200, 6400 and 12800 steps/revolutions.
- Various encoder resolution available.
- INPUT and OUTPUT configurable.
- Protections:
  - -Protection against under-voltage and over-voltage
  - -Protection against a short-circuit at motor outputs
  - -Overtemperature protection with thermal sensor
  - -Open motor/encoder phase.
- Automatic current reduction at motor standstill.
- Electronic damping facility for further acoustic noise and mechanic vibrations reduction.
- Easy wiring with plug-in connectors. Maximum compactness.
- Optoinsulated digital I/O to ensure best EM noise immunity.
- Coupling with stepping motors rated for high insulation is mandatory.
- Warranty: 24 months.

AUTO FEED FUNCTION

AUTO SYNC FUNCTION

WARRANTY 2 YEARS GARANZIA

POWER AND LOGIC CONNECTIONS

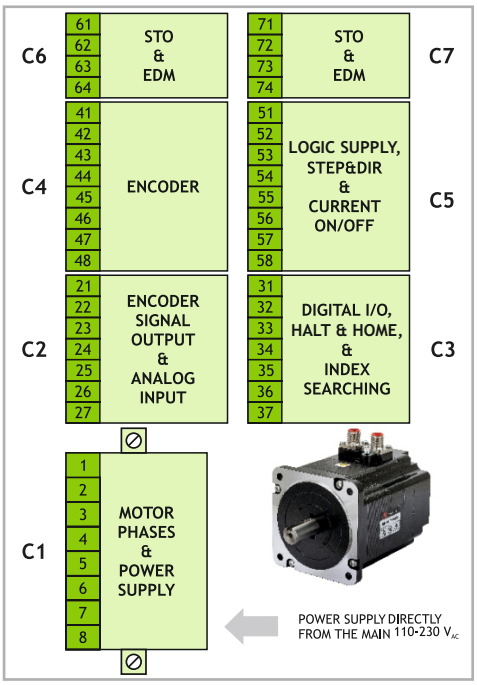

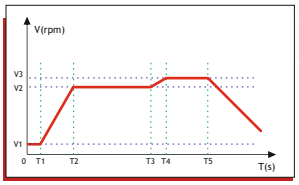

.P drives Motion Profile example

Programmable through RTA Studio IDE

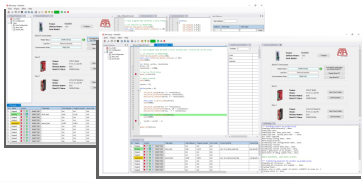

MECHANICAL DIMENSIONS

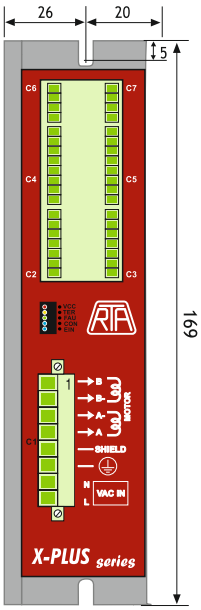

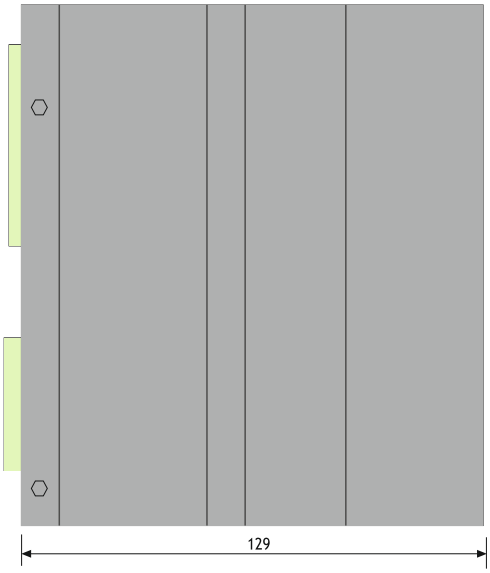

X-PLUS MS4 HIGH SIDE VIEW

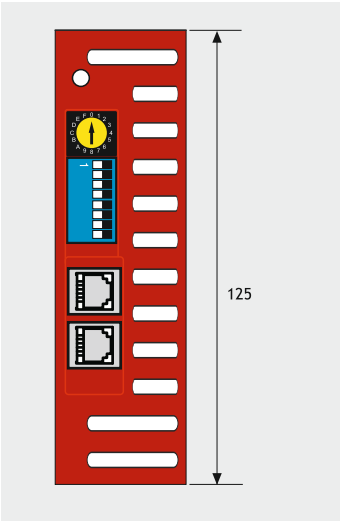

Dimensions in millimeters - Not in scale.

X-PLUS RS4 Series Drives



INTRODUCTION

- X-Plus RS4 is a new model of RTA flagship high-power stepping motor drive with Step & Direction and Analog Input interface.
- The embedded Auto-Sync function with encoder enhances the drive features and optimizes the motor performances.
- Also available with Modbus RTU interface.

HIGHLIGHTS

- Embedded Auto-Sync function with encoder, featuring a closed loop positioning.
- Easy parameter setting via DIP switches.
- Modes of operation: STEP&DIR or Analog Input velocity setpoint (± 10 V) for application where SPEED CONTROL is needed.
- Integrated system for back EMF energy dissipation with optional external resistor.
- LED diagnostic function.
- Zero index searching function.
- Encoder signal output functionality included.



AUTO SYNC FUNCTION

STO FUNCTION FEATURES

- Safe Torque Off (STO) function - SIL3-PIe
- Error Detection Monitor (EDM) output

SIL3 SAFE TORQUE OFF (STO)

ONE OF THE MOST COMPACT DRIVES WITH POWER INPUT DIRECTLY FROM THE MAIN AC SUPPLY (110 - 230 VAC)

Series	Model	V_{AC} range	I_{NP} min. (Peak value)	I_{NP} max. (Peak value)	Dimensions
		(Volt)	(Amp)	(Amp)	(mm)
X-PLUS	RS4	110 to 230 +/- 15%	1.2	4.8	169x129x46

TECHNICAL FEATURES

- Range of operating nominal voltage: 110-230 V_{AC}.
- Range of current motor settings: 1.2-4.8 A.
  Setting up to four possible values by means of dip-switches.
- Microstepping: 1600, 3200, 6400 and 12800 steps/revolutions
  Setting by means of dip-switches.
- Various encoder resolution available.
- Automatic current reduction at motor standstill.
- Protections:

  -Protection against under-voltage and over-voltage.
  -Protection against a short-circuit at motor outputs.
  -Overtemperature protection with thermal sensor.
  -Open motor/encoder phase.
- Electronic damping facility for further acoustic noise and mechanic vibrations reduction.
- Easy wiring with plug-in connectors .
  Maximum compactness.
- Optoinsulated digital I/O to ensure best EM noise immunity.
- Coupling with stepping motors rated for high insulation is mandatory.
- Warranty: 24 months.



POWER AND LOGIC CONNECTIONS

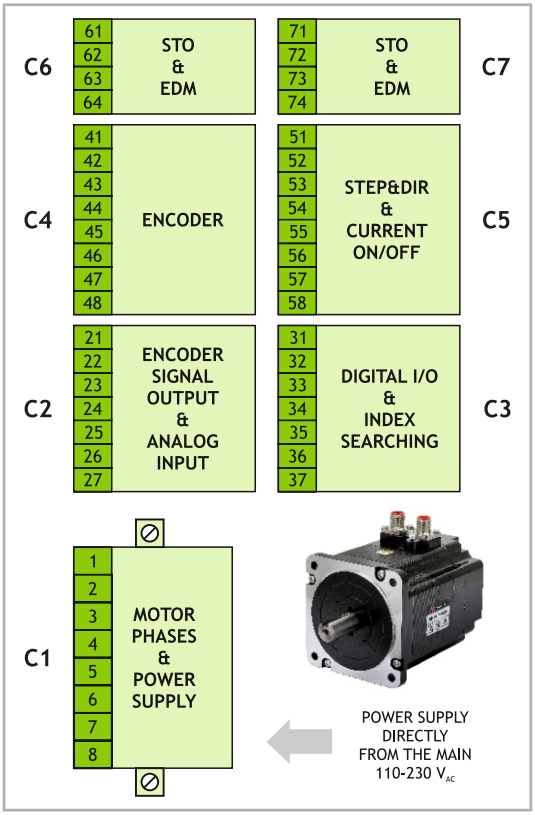

SCAN THE QR CODE TO WATCH A VIDEO ON THE AUTO-SYNC FUNCTION

AUTO SYNC FUNCTION

MECHANICAL DIMENSIONS

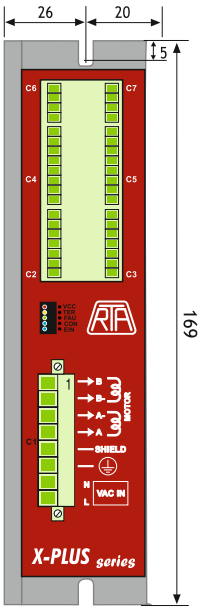

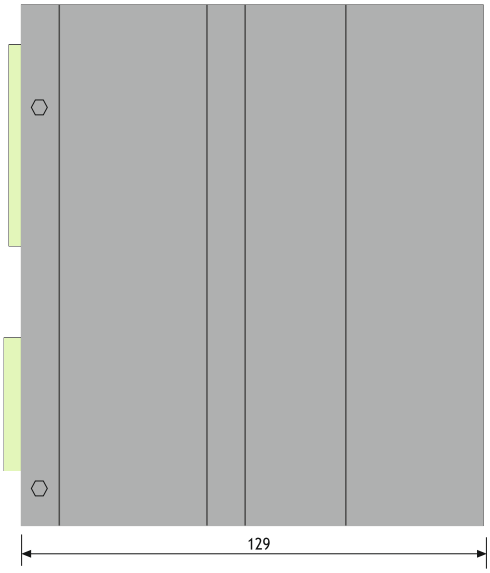

X-PLUS RS4 HIGH SIDE VIEW

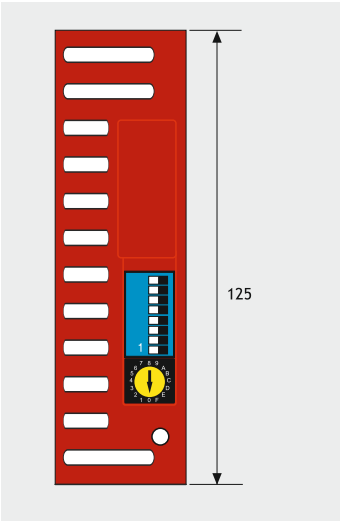

Dimensions in millimeters - Not in scale.

R-MOD ET Combo Unit

NEW! Flange size Nema 23

EtherCAT®

INTRODUCTION

R-MOD ET is a series of combo-units in two sizes with integrated microstep bipolar chopper EtherCAT drives, based on battery-less multi-turn absolute encoder.

HIGHLIGHTS

FULL CLOSED LOOP

- New generation Full Closed Loop Absolute Encoder version available
- Holding Torque up to 300 Ncm
- Communication by means of EtherCAT interface
- Different Operation Modes
- Different flange sizes (NEMA 23 / NEMA 24)
- Different HOMING operation modes
- PROXIMITY hardware input
- AUTO-SYNC function
- Battery-less Multi-turn ABSOLUTE ENCODER versions



Front Brake and/or Gearbox versions available

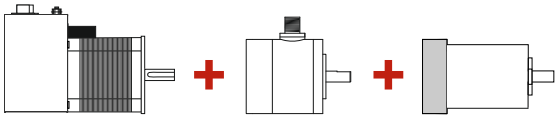

AUTO SYNC FUNCTION

BATTERY-LESS ABSOLUTE ENCODER

CE

SPACE SAVING SOLUTION

Please refer to download.rta.it for technical specifications

Starter kit and cable set available.

SCAN THE QR CODE TO WATCH A VIDEO ON THE AUTO-SYNC FUNCTION

AUTO SYNC FUNCTION

Models	Lenght (mm)	Flange size (mm)	Holding Torque (Ncm)	Encoder Type	Certifications
R-MOD ET A2H1MK *Full Closed Loop*	123.2	56	110	Battery-less Multi-turn Absolute	CE
R-MOD ET A2H2MK *Full Closed Loop*	145.2	56	165	Battery-less Multi-turn Absolute	CE
R-MOD ET A3H1MK *Full Closed Loop*	123.2	60	170	Battery-less Multi-turn Absolute	CE
R-MOD ET A3H2MK *Full Closed Loop*	155.2	60	300	Battery-less Multi-turn Absolute	CE

Incremental encoder version also available.

SIZES AND PERFORMANCES

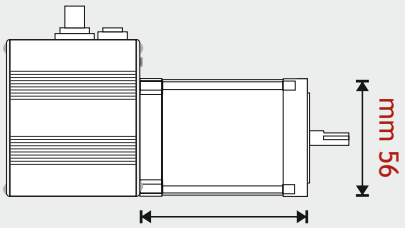

mm 78 (2H) **Holding Torque:** 165 Ncm

mm 54.5 (1H) **Holding Torque:** 110 Ncm

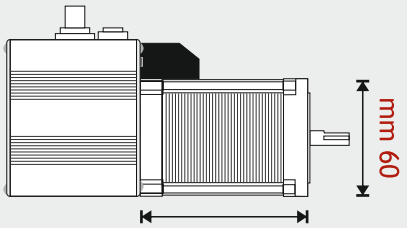

mm 85.8 (2H) **Holding Torque:** 300 Ncm

mm 53.8 (1H) **Holding Torque:** 170 Ncm

CONNECTION SCHEME

CN1

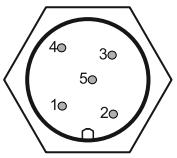

1: Input (PX / Touch probe)
2: Power supply
3: Input (PX / Touch probe)
4: GND
5: Logic power supply

CN2



EtherCAT OUT (Female)

CN3



EtherCAT IN (Female)

1: Trasmit Data +
2: Receive Data +
3: Trasmit Data -
4: Receive data -

TORQUE/SPEED CURVE

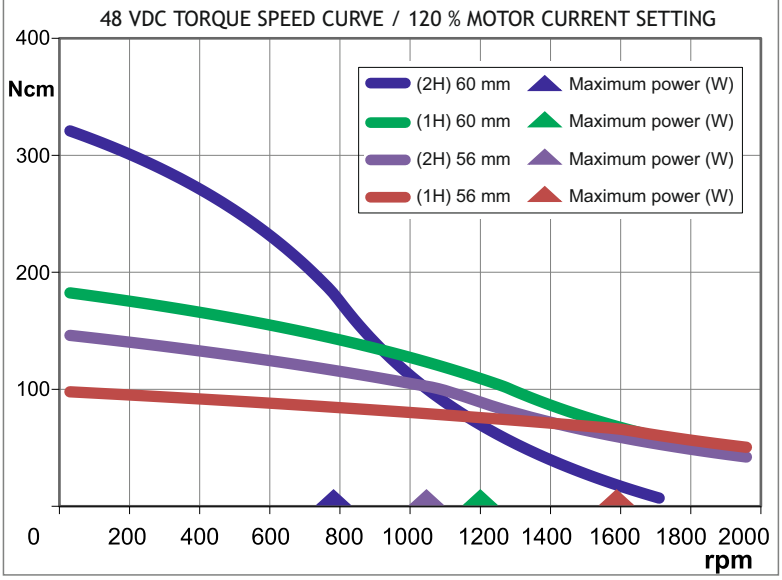

MECHANICAL DIMENSIONS (mm)

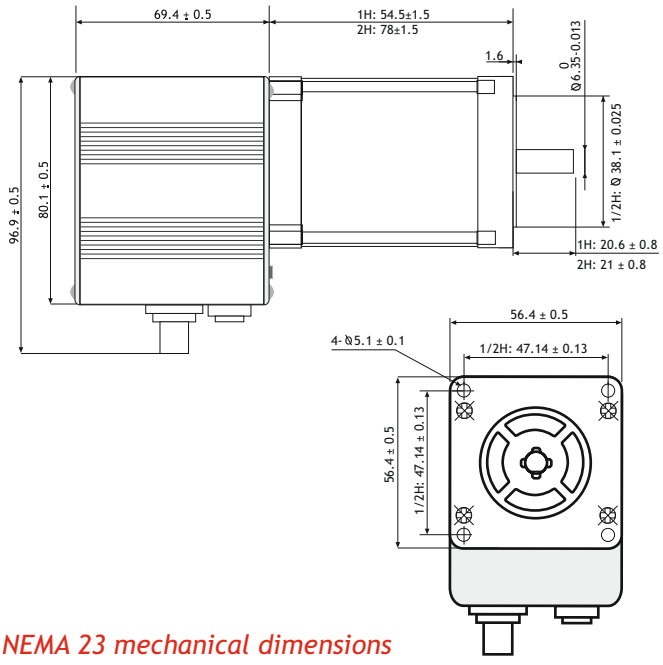

NEMA 23 mechanical dimensions

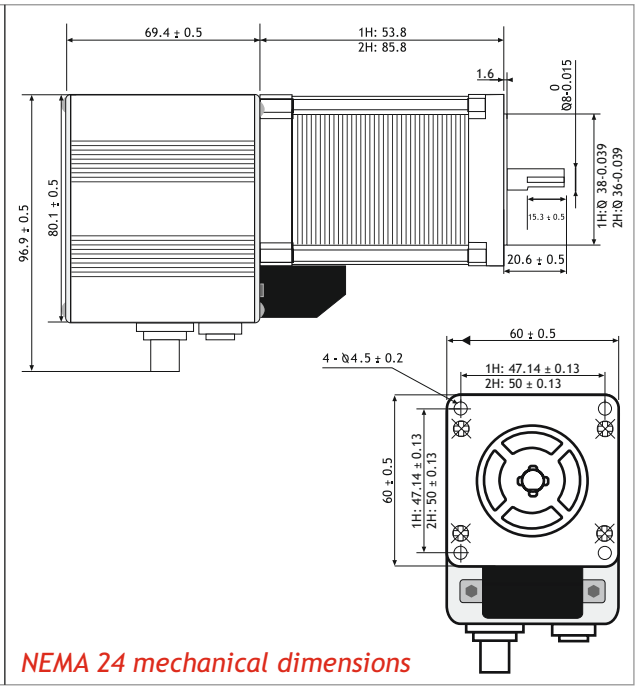

NEMA 24 mechanical dimensions

HI MOD ET/ETS Combo Unit

EtherCAT®

3rd FIRMWARE GENERATION

INTRODUCTION

HI-MOD ETS is a series of stepping motors in three sizes with integrated ministep bipolar chopper EtherCAT drives and STO Function, based on battery-less multi-turn absolute encoder.

HIGHLIGHTS

FULL CLOSED LOOP

- New generation Full Closed Loop Absolute Encoder versions available
- Holding Torque up to 920 Ncm
- Communication by means of EtherCAT interface
- Different Operation Modes
- Available Inputs / Outputs
- Touch probe hardware input
- AUTO-SYNC function
- Battery-less Multi-turn ABSOLUTE ENCODER versions
- STO Function - SIL3 with Error Detection Monitor

AUTO SYNC FUNCTION

SPACE SAVING SOLUTION

BATTERY-LESS ABSOLUTE ENCODER

CE

STO SIL3 SAFE TORQUE OFF (STO)

M12 CONNECTOR

SIDE VIEW

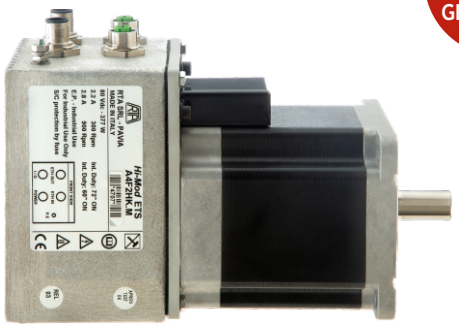

TOP VIEW

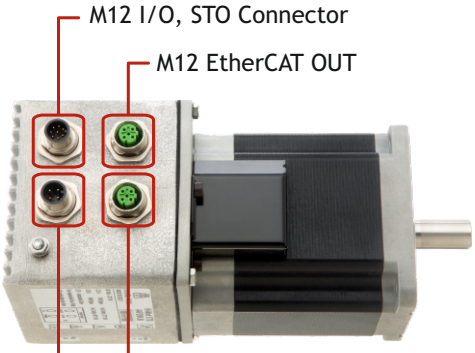

Front Brake and/or Gearbox versions available

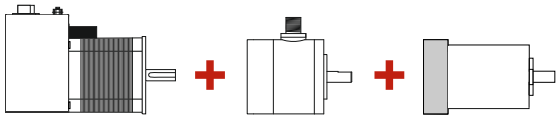

SCAN THE QR CODE TO WATCH A VIDEO ON THE AUTO-SYNC FUNCTION

AUTO SYNC FUNCTION

Please refer to download.rta.it for technical specifications

Models	Motor Lenght (mm)	Holding Torque (Ncm)	Encoder Type	Digital In/Out	STO	Rated Voltage (VDC)
HI-MOD ETS A4K2HK.M *Full Closed Loop*	96.5	700	Battery-less Multi-turn Absolute	2/2	✓	48-80
HI-MOD ET A5K2HK.M *Full Closed Loop*	96·5	700	Battery-less Multi-turn Absolute	2/2	X	48-80
140 VDC **HI-MOD ETS A4K2RK.M** *Full Closed Loop*	96.5	700	Battery-less Multi-turn Absolute	2/2	✓	80-140
140 VDC **HI-MOD ET A5K2RK.M** *Full Closed Loop*	96.5	700	Battery-less Multi-turn Absolute	2/2	X	80-140

Other models upon request

SIZES AND PERFORMANCES

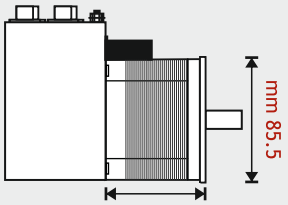

mm 66 (1H)

Holding Torque: 360 Ncm

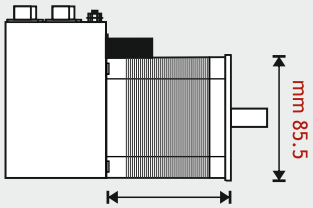

mm 96.5 (2H)

Holding Torque: 700 Ncm

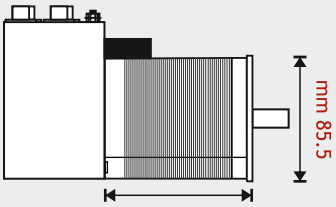

mm 127 (3H)

Holding Torque: 920 Ncm

CONNECTION SCHEME

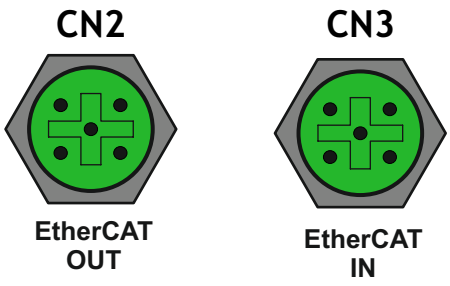

TORQUE/SPEED CURVE

48/80/140 VDC TORQUE/SPEED CURVE - REF. 700 Ncm MODELS

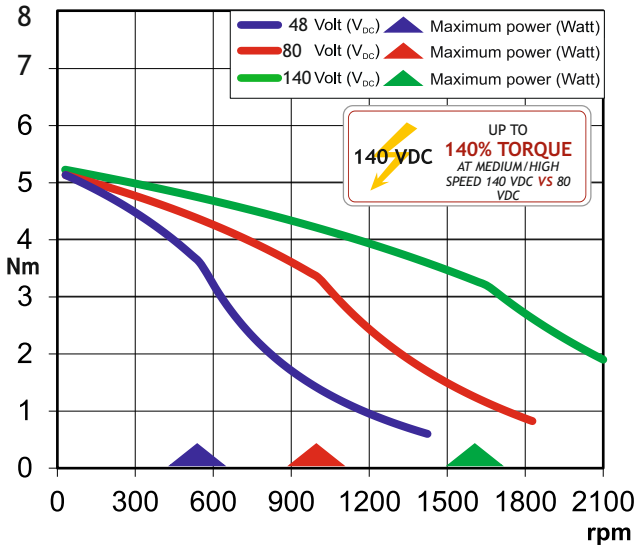

MECHANICAL DIMENSIONS (mm)

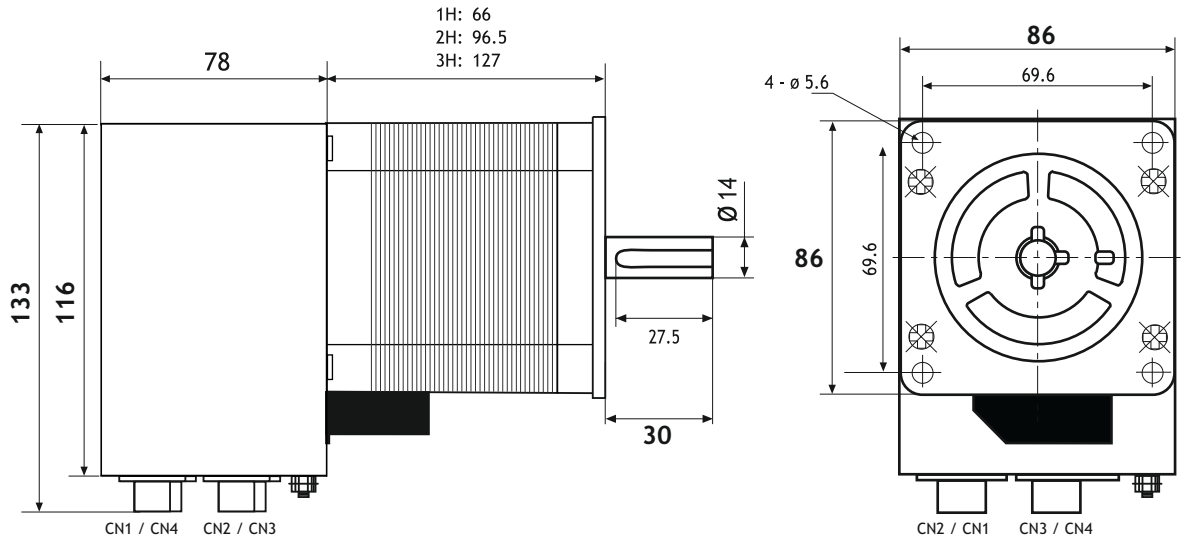

Starter kit and cable set available.

STEPPING MOTOR DRIVES ACCESSORIES

SWITCHING POWER SUPPLY

R-UHP 1000-48 SWITCHING POWER SUPPLY

Main Features

- 21 A output - 48 VDC
- AC input voltage range:90~264 VAC
- -30~+70 °C ambient temperature
- Protections: Short Circuit, Overload, Over Voltage, Over Temperature
- V_{DC_OK} signal active
- Led indicator for power on
- Warranty: 24 months

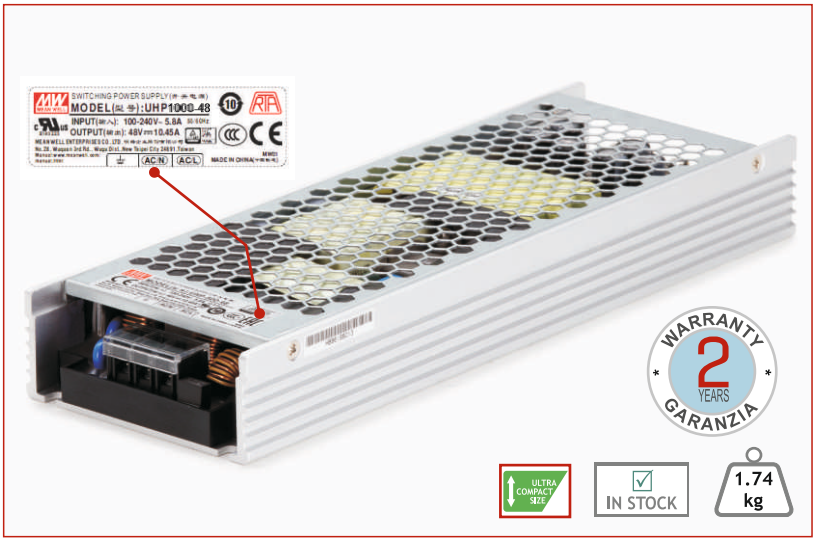

Dimensions (Units:mm)

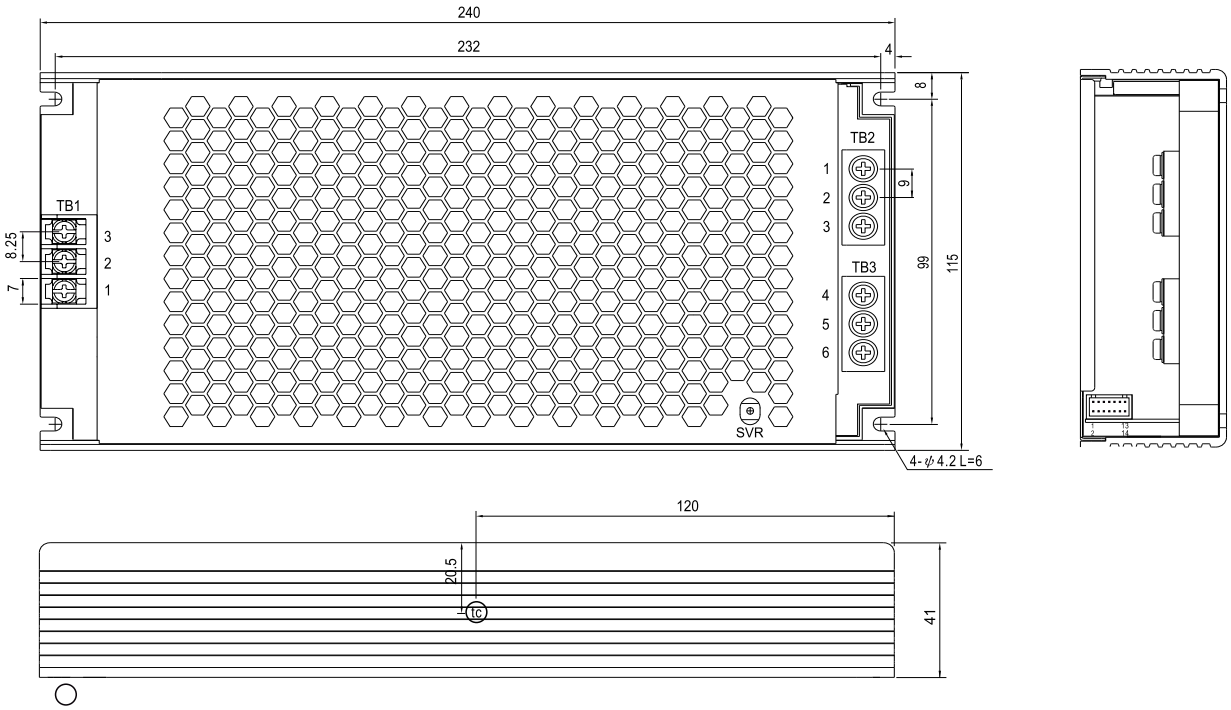

MORE INFO

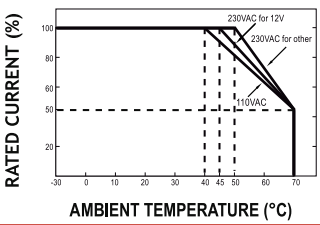

DERATING CURVE

Specifications

MODEL		R-UHP 1000-48
OUTPUT	DC VOLTAGE	48V
	RATED CURRENT	21A
	RATED POWER	1008W
	VOLTAGE ADJ. RANGE	48 ~ 57.6V
	VOLTAGE TOLERANCE Note.	±1.0%
	LINE REGULATION	±0.5%
	LOAD REGULATION	±0.5%
INPUT	VOLTAGE RANGE Note.3	90 ~ 264VAC 127 ~ 370VDC
	FREQUENCY RANGE	47 ~ 63Hz
	EFFICIENCY	96%
	AC CURRENT (Typ.)	10.1A/115VAC 5.3A/230VAC
	OVERLOAD	105 ~ 120% rated output power
		Protection type: Constant current limiting with delay shutdown after 3 seconds, re-power to cover
	OVER VOLTAGE	59 ~ 66 V
		Protection type: Shut down O/P voltage, re-power on to recover
	OVER TEMPERATURE	Protection type: Shut down O/P voltage, recovers automatically after temperature goes down
FUNCTION	DC_OK SIGNAL(Optional)	The TTL signal out, PSU turn on=4.5 ~ 5.5V; PSU turn off= -01 ~ 0.5V
ENVIRONMENT	WORKING TEMP.	-30 ~ +70°C (Refer to «Derating Curve»)
	WORKING HUMIDITY	20 ~ 90% RH non-condensing
	VIBRATION	10 ~ 500Hz, 5G 10min./1cycle, 60min. each along X, Y, Z axes
SAFETY & EMC (Note.5)	SAFETY STANDARDS	UL62368-1, TUV BS EN/EN62368-1, EAC TP TC 004 approved; design refer to BS EN/EN61558-1, BS EN/EN60335-1
	WITHSTAND VOLTAGE	I/P-O/P:3 75KVAC I/P-FG:2KVAC O/P-FG:1 25KVAC
	ISOLATION RESISTANCE	I/P-O/P, I/P-FG, O/P-FG:100M Ohms/500VDC/25°C/70%RH
	EMC EMISSION	Compliance to EN55032,GB9254,Class B, EN55014,EN61000-3-2,-3,EAC TP TC 020
	EMC IMMUNITY	Compliance to EN61000-4-2,3,4,5,6,8,11;EN61000-6-2 (EN50082-2), heavy industry level ,criterial A, EAC TP TC020
OTHERS	MTBF	218.86K hrs min. Telcordia SR-332 (Bellcore); 69.81K hrs min. MIL-HDBK-217F(25°C)
NOTE	1. All parameters NOT specially mentioned are measured at 230 VAC input, rated load and 25°C ambient temperature. 2. Tolerance: includes set up tolerance, line regulation and load regulation. 3. Please check the derating curve for more details. 4.The ambient temperature derating of 5°C /1000m is needed for operating altitude greater than 2000m (6500ft). 5. The power supply is considered a component which will be installed into a final equipment. The final equipment must be re-confirmed that is still meets EMC directives.	

Mounting

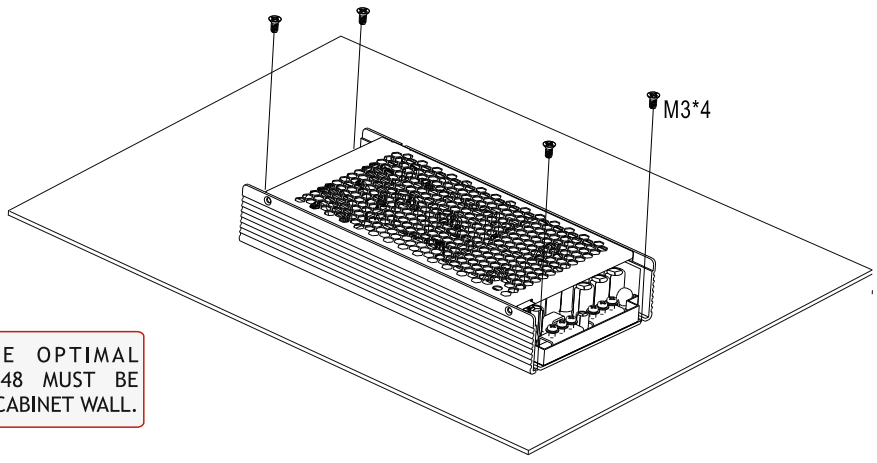

IN ORDER TO ASSURE OPTIMAL DISSIPATION, R-UHP 1000-48 MUST BE INSTALLED ON ELECTRICAL CABINET WALL.



STEPPING MOTORS

RH 1S1H

Dimensions (Unit:mm)

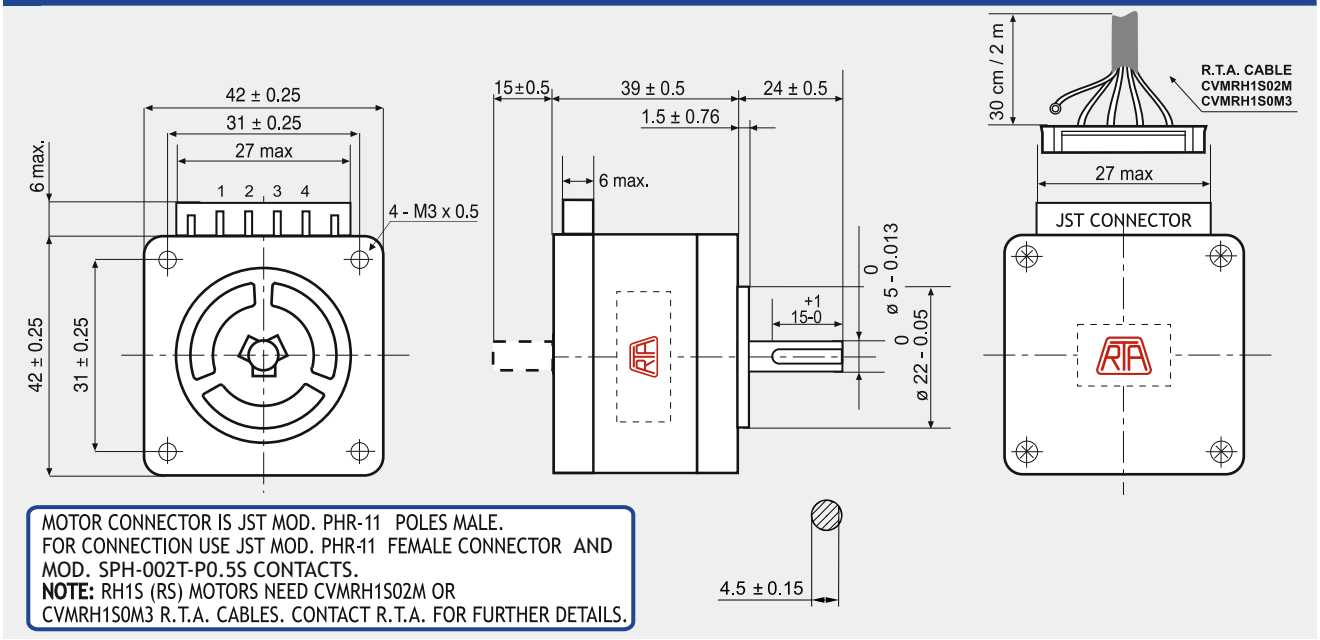

MOTOR CONNECTOR IS JST MOD. PHR-11 POLES MALE.
FOR CONNECTION USE JST MOD. PHR-11 FEMALE CONNECTOR AND MOD. SPH-002T-P0.5S CONTACTS.
NOTE: RH1S (RS) MOTORS NEED CVMRH1S02M OR CVMRH1S0M3 R.T.A. CABLES. CONTACT R.T.A. FOR FURTHER DETAILS.

FEATURES

MODEL		RH 1S1H (RH 1S1H-RS)
BASIC STEP ANGLE		1.8 ± 0.09°
BIPOLAR CURRENT	(Amp)	2.0
UNIPOLAR CURRENT	(Amp)	
RESISTANCE	(Ohm)	1.1
INDUCTANCE	(mH)	2.4
BIPOLAR HOLDING TORQUE	(Ncm)	43
UNIPOLAR HOLDING TORQUE	(Ncm)	
ROTOR INERTIA	(Kgm ^{2} x 10 $^{-7}$)	46
THEORETICAL ACCELERATION	(rad x sec.$^{-2}$)	93000
BACK E.M.F.	(V/Krpm)	21.5
MASS	(Kg)	0.3
PROTECTION DEGREE		IP40
LEADS CODE		V

Codes between brackets refer to double shaft models.

TORQUE/SPEED CURVE

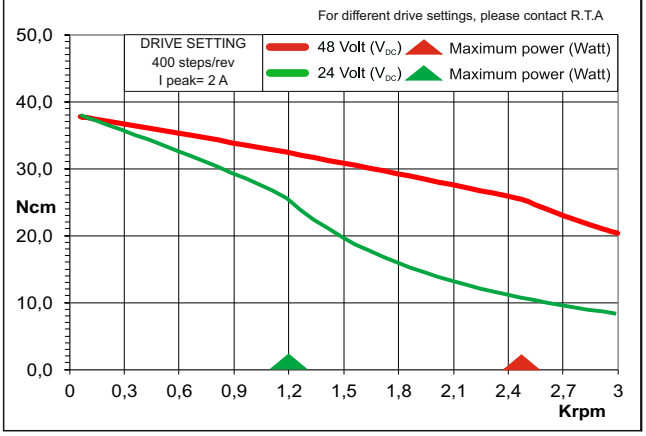

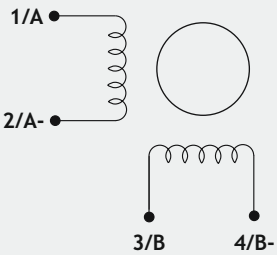



R.T.A. MOTOR CABLE
CVMRH1S02M
CVMRH1S0M3

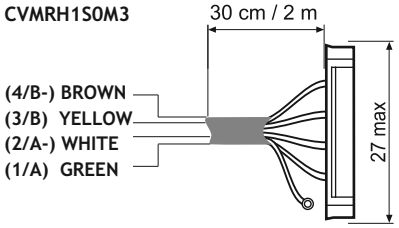

Suggested R.T.A. drive series: BSD, CSD, FLEX-DRIVE

RH 1S2H

Dimensions (Unit:mm)

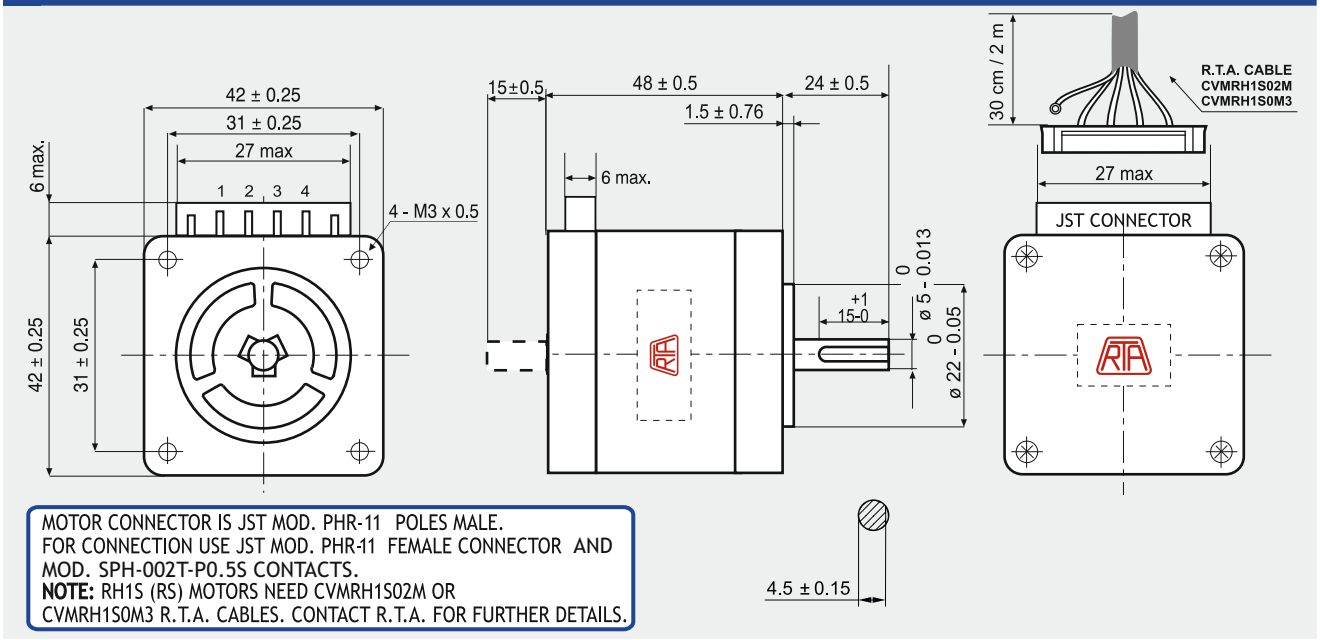

MOTOR CONNECTOR IS JST MOD. PHR-11 POLES MALE.
FOR CONNECTION USE JST MOD. PHR-11 FEMALE CONNECTOR AND MOD. SPH-002T-P0.5S CONTACTS.
NOTE: RH1S (RS) MOTORS NEED CVMRH1S02M OR CVMRH1S0M3 R.T.A. CABLES. CONTACT R.T.A. FOR FURTHER DETAILS.

FEATURES

MODEL		RH 1S2H (RH 1S2H-RS)
BASIC STEP ANGLE		1.8 ± 0.09°
BIPOLAR CURRENT	(Amp)	2.3
UNIPOLAR CURRENT	(Amp)	
RESISTANCE	(Ohm)	0.93
INDUCTANCE	(mH)	2.2
BIPOLAR HOLDING TORQUE	(Ncm)	56
UNIPOLAR HOLDING TORQUE	(Ncm)	
ROTOR INERTIA	(Kgm ^{2} x 10 $^{-7}$)	63
THEORETICAL ACCELERATION	(rad x sec.$^{-2}$)	89000
BACK E.M.F.	(V/Krpm)	24.3
MASS	(Kg)	0.38
PROTECTION DEGREE		IP40
LEADS CODE		V

Codes between brackets refer to double shaft models.

TORQUE/SPEED CURVE

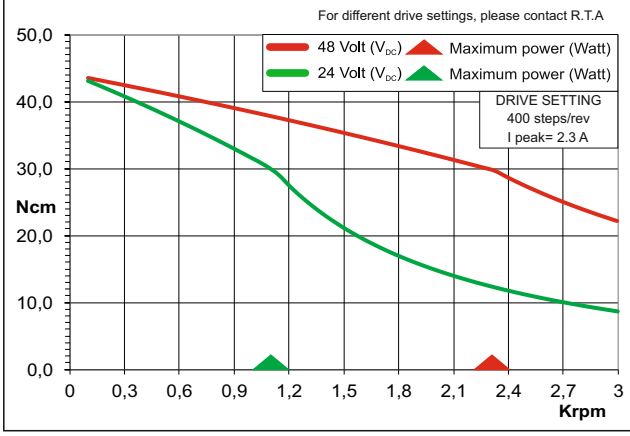

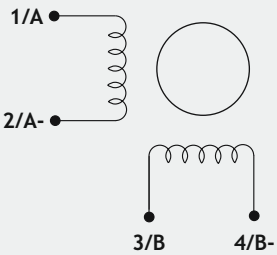

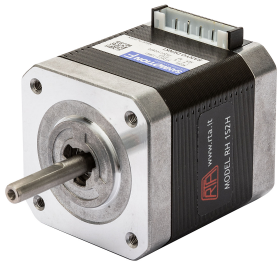

R.T.A. MOTOR CABLE
CVMRH1S02M
CVMRH1S0M3

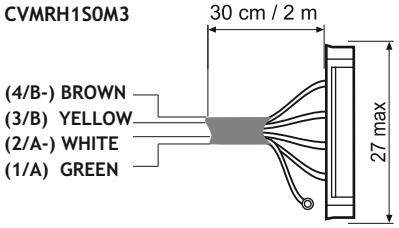

Suggested R.T.A. drive series: BSD, CSD, FLEX-DRIVE

RH 1S3H

Dimensions (Unit:mm)

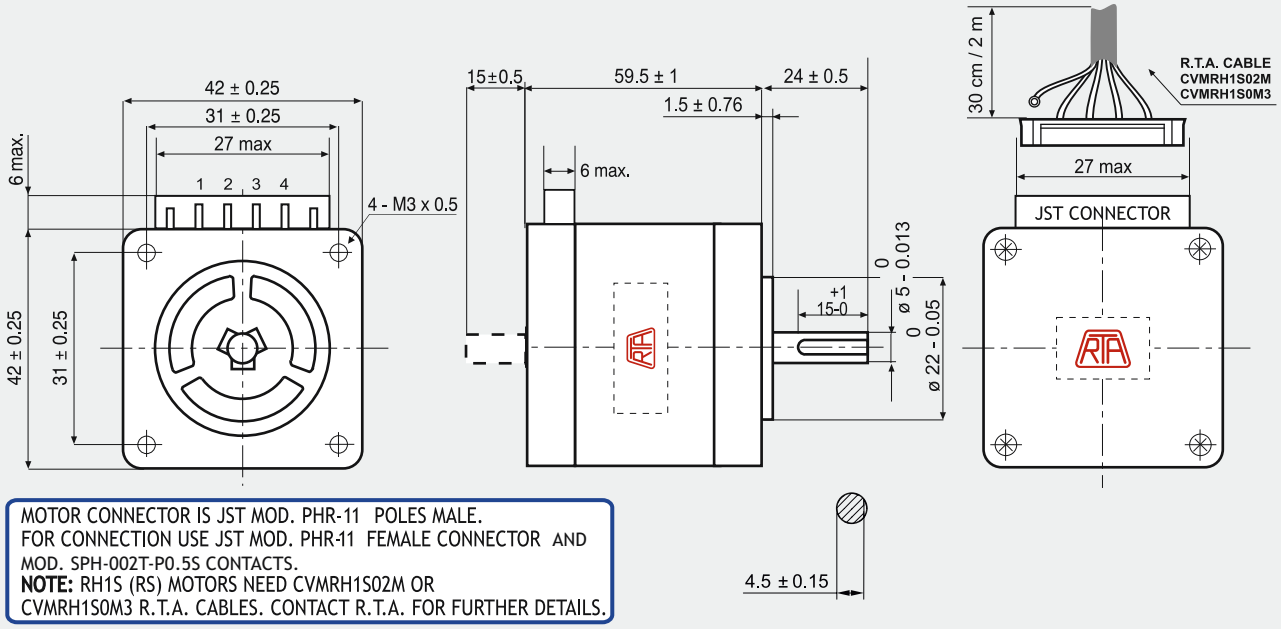

MOTOR CONNECTOR IS JST MOD. PHR-11 POLES MALE.
FOR CONNECTION USE JST MOD. PHR-11 FEMALE CONNECTOR AND MOD. SPH-002T-P0.5S CONTACTS.
NOTE: RH1S (RS) MOTORS NEED CVMRH1S02M OR CVMRH1S0M3 R.T.A. CABLES. CONTACT R.T.A. FOR FURTHER DETAILS.

FEATURES

MODEL		RH 1S3H (RH 1S3H-RS)
BASIC STEP ANGLE		1.8 ± 0.09°
BIPOLAR CURRENT	(Amp)	2.3
UNIPOLAR CURRENT	(Amp)	
RESISTANCE	(Ohm)	1.2
INDUCTANCE	(mH)	3.0
BIPOLAR HOLDING TORQUE	(Ncm)	80
UNIPOLAR HOLDING TORQUE	(Ncm)	
ROTOR INERTIA	(Kgm ^{2} x 10 $^{-7}$)	94
THEORETICAL ACCELERATION	(rad x sec.$^{-2}$)	85100
BACK E.M.F.	(V/Krpm)	34.7
MASS	(Kg)	0.51
PROTECTION DEGREE		IP40
LEADS CODE		V

Codes between brackets refer to double shaft models.

TORQUE/SPEED CURVE

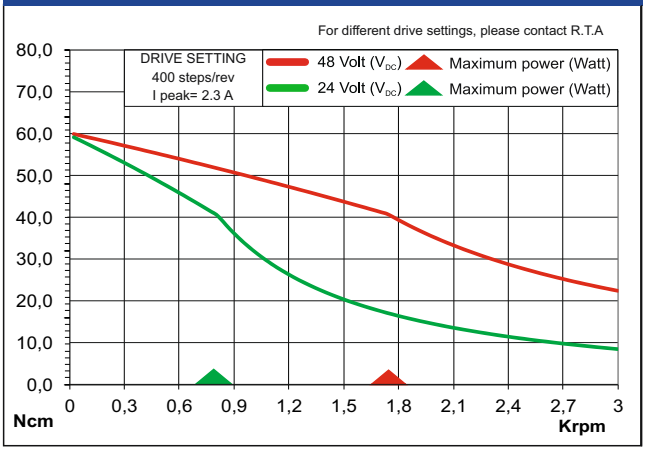

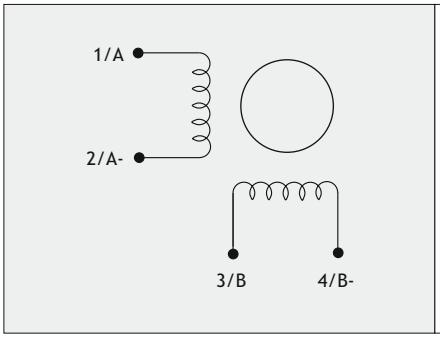

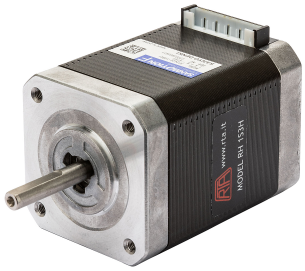

R.T.A. MOTOR CABLE
CVMRH1S02M
CVMRH1S0M3

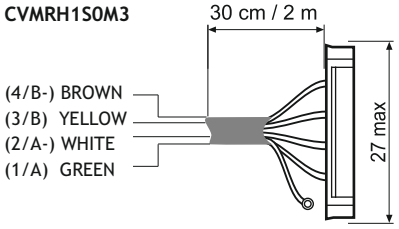

Suggested R.T.A. drive series: BSD, CSD, FLEX-DRIVE

RH 1S1H-0XX0

Dimensions (Unit:mm)

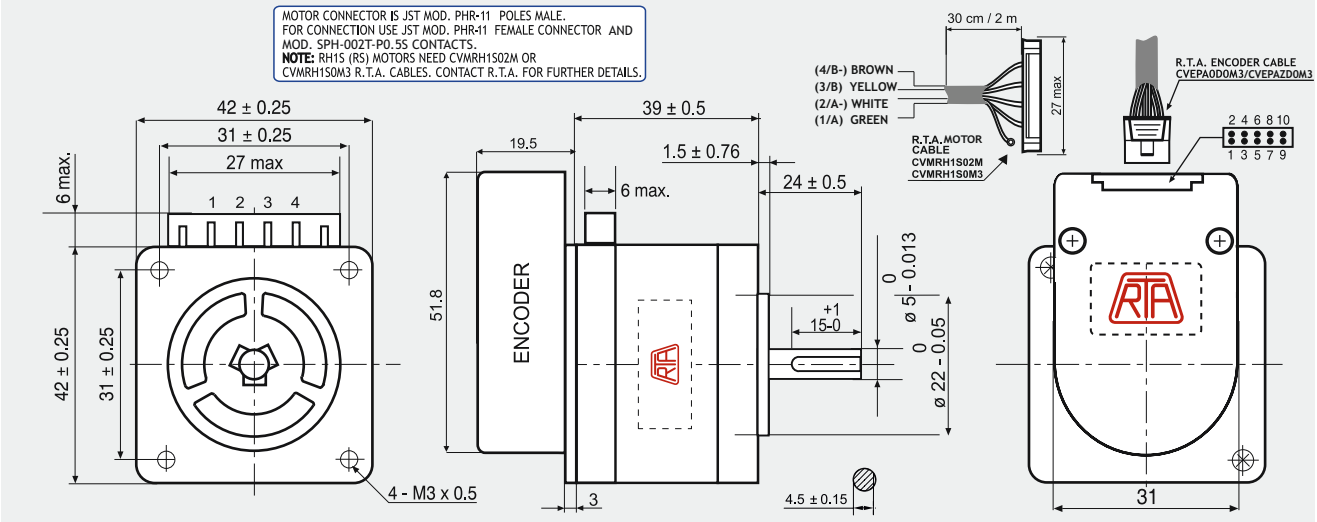

ENCODER OPTIONS:		RH 1S1H-04D0	RH 1S1H-04E0	RH 1S1H-0HE0
RESOLUTION		400 cpr	400 cpr	4000 cpr
INDEX		No	Yes	Yes
CURRENT CONSUMPTION	(mA)	50	50	85
HIGH LEVEL OUTPUT	(Volt)	5 (TIP) - 4.75 (MIN) (I_{MAX}=25mA)	3.4 (TIP) - 2.4 (MIN) (I_{MAX}=20mA)	3.4 (TIP) - 2.4 (MIN) (I_{MAX}=20mA)
LOW LEVEL OUTPUT	(Volt)	0.25 (TIP) - 0.6 (MAX) (I_{MAX}=25mA)	0.2 (TIP) - 0.4 (MAX) (I_{MAX}=20mA)	0.2 (TIP) - 0.4 (MAX) (I_{MAX}=20mA)
OUTPUT SIGNAL		Differential	Differential	Differential
MAXIMUM FREQUENCY	(KHz)	100	100	720
POWER SUPPLY VOLTAGE	(Volt)	5 V_{DC} ±10%	5 V_{DC} ±10%	5 V_{DC} ±10%

FEATURES

MODEL		RH 1S1H
BASIC STEP ANGLE		1.8 ± 0.09°
BIPOLAR CURRENT	(Amp)	2.0
UNIPOLAR CURRENT	(Amp)	
RESISTANCE	(Ohm)	1.1
INDUCTANCE	(mH)	2.4
BIPOLAR HOLDING TORQUE	(Ncm)	43
UNIPOLAR HOLDING TORQUE	(Ncm)	
ROTOR INERTIA	(Kgm ^{2} x 10 $^{-7}$)	46
THEORETICAL ACCELERATION	(rad x sec.$^{-2}$)	93000
BACK E.M.F.	(V/Krpm)	21.5
MASS	(Kg)	0.3
PROTECTION DEGREE		IP40
LEADS CODE		V

TORQUE/SPEED CURVE

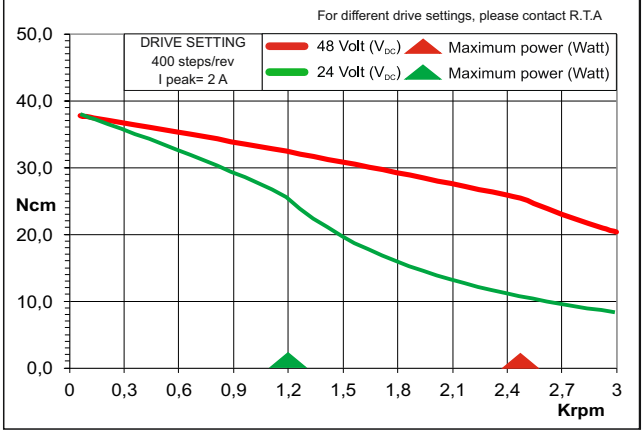

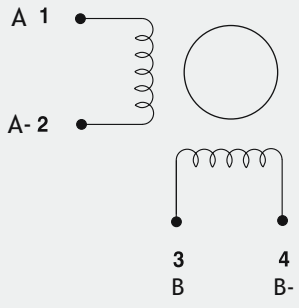

RTA MOTOR CABLE COLORS

DESCRIPTION	
CHANNEL A	GREEN
CHANNEL A-	WHITE
CHANNEL B	YELLOW
CHANNEL B-	BROWN

ENCODER PIN-OUT

DESCRIPTION	04D0 PINS	04E0/0HE0 PINS	R.T.A. CABLE LEADS COLOR
CHANNEL A+	6	6	GREEN
CHANNEL A-	5	5	PURPLE
CHANNEL B+	8	8	BLUE
CHANNEL B-	7	7	BROWN
+ DC (5V)	2	2	RED
GROUND	3	3	BLACK
INDEX+	/	10	ORANGE
INDEX-	/	9	WHITE
R.T.A. CABLE (30 cm)	CVEPA0D0M3	CVEPAZD0M3	

Suggested R.T.A. drive series: BSD, CSD, FLEX-DRIVE

RH 1S2H-0XX0

Dimensions (Unit:mm)

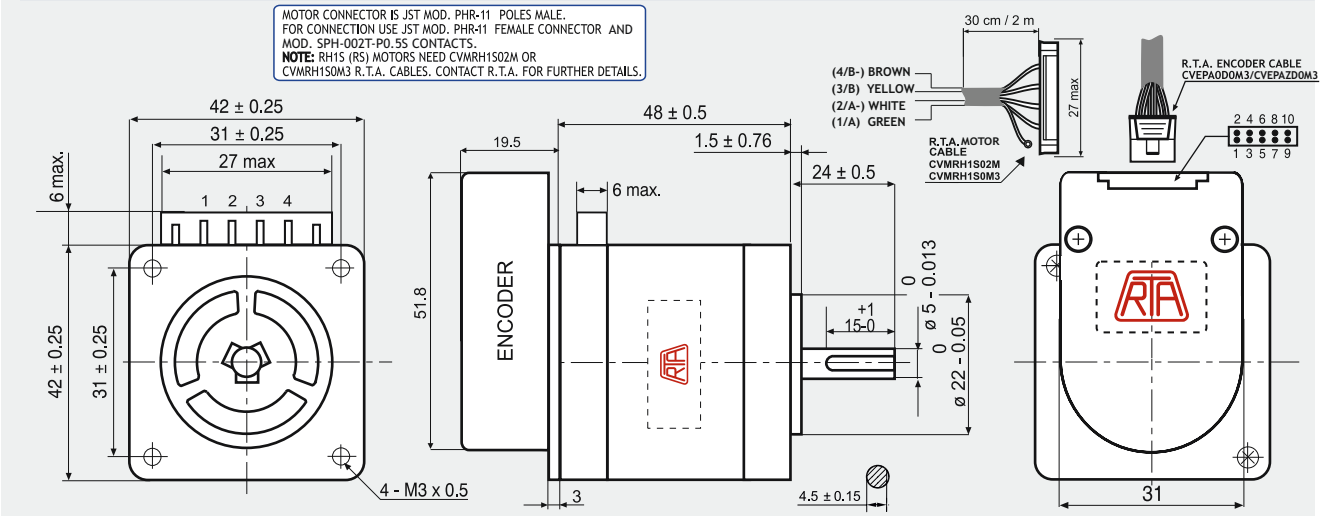

ENCODER OPTIONS:		RH 1S2H-04D0	RH 1S2H-04E0	RH 1S2H-0HE0
RESOLUTION		400 cpr	400 cpr	4000 cpr
INDEX		No	Yes	Yes
CURRENT CONSUMPTION	(mA)	50	50	85
HIGH LEVEL OUTPUT	(Volt)	5 (TIP) - 4.75 (MIN) (I_{MAX}=25mA)	3.4 (TIP) - 2.4 (MIN) (I_{MAX}=20mA)	3.4 (TIP) - 2.4 (MIN) (I_{MAX}=20mA)
LOW LEVEL OUTPUT	(Volt)	0.25 (TIP) - 0.6 (MAX) (I_{MAX}=25mA)	0.2 (TIP) - 0.4 (MAX) (I_{MAX}=20mA)	0.2 (TIP) - 0.4 (MAX) (I_{MAX}=20mA)
OUTPUT SIGNAL		Differential	Differential	Differential
MAXIMUM FREQUENCY	(KHz)	100	100	720
POWER SUPPLY VOLTAGE	(Volt)	5 V_{DC} ±10%	5 V_{DC} ±10%	5 V_{DC} ±10%

FEATURES

MODEL		RH 1S2H
BASIC STEP ANGLE		1.8 ± 0.09°
BIPOLAR CURRENT	(A)	2.3
UNIPOLAR CURRENT	(A)	
RESISTANCE	(Ohm)	0.93
INDUCTANCE	(mH)	2.2
BIPOLAR HOLDING TORQUE	(Ncm)	56
UNIPOLAR HOLDING TORQUE	(Ncm)	
ROTOR INERTIA	(Kgm ^{2} x 10 $^{-7}$)	63
THEORETICAL ACCELERATION	(rad x sec.$^{-2}$)	89000
BACK E.M.F.	(V/Krpm)	24.3
MASS	(Kg)	0.38
PROTECTION DEGREE		IP40
LEADS CODE		V

TORQUE/SPEED CURVE

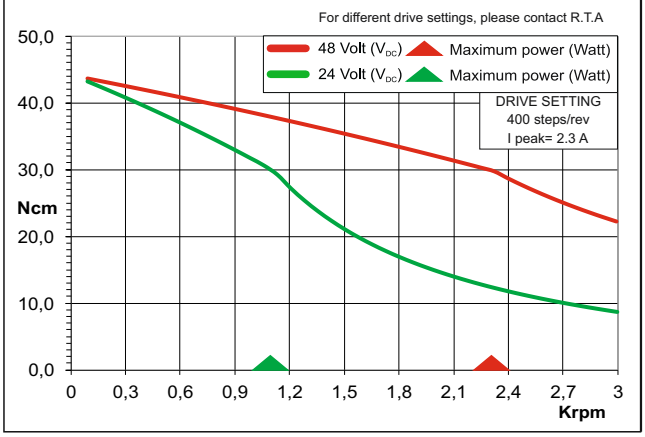

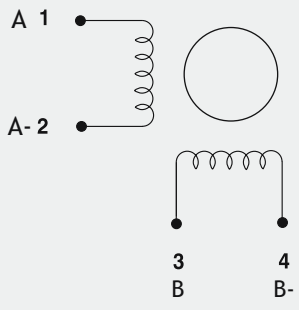

RTA MOTOR CABLE COLORS

DESCRIPTION	
CHANNEL A	GREEN
CHANNEL A-	WHITE
CHANNEL B	YELLOW
CHANNEL B-	BROWN

ENCODER PIN-OUT

DESCRIPTION	04D0 PINS	04E0/0HE0 PINS	R.T.A. CABLE LEADS COLOR
CHANNEL A+	6	6	GREEN
CHANNEL A-	5	5	PURPLE
CHANNEL B+	8	8	BLUE
CHANNEL B-	7	7	BROWN
+ DC (5V)	2	2	RED
GROUND	3	3	BLACK
INDEX+	/	10	ORANGE
INDEX-	/	9	WHITE
R.T.A. CABLE (30 cm)	CVEPA0D0M3	CVEPAZD0M3	

Suggested R.T.A. drive series: BSD, CSD, FLEX-DRIVE

RH 1S3H-0XX0

Dimensions (Unit:mm)

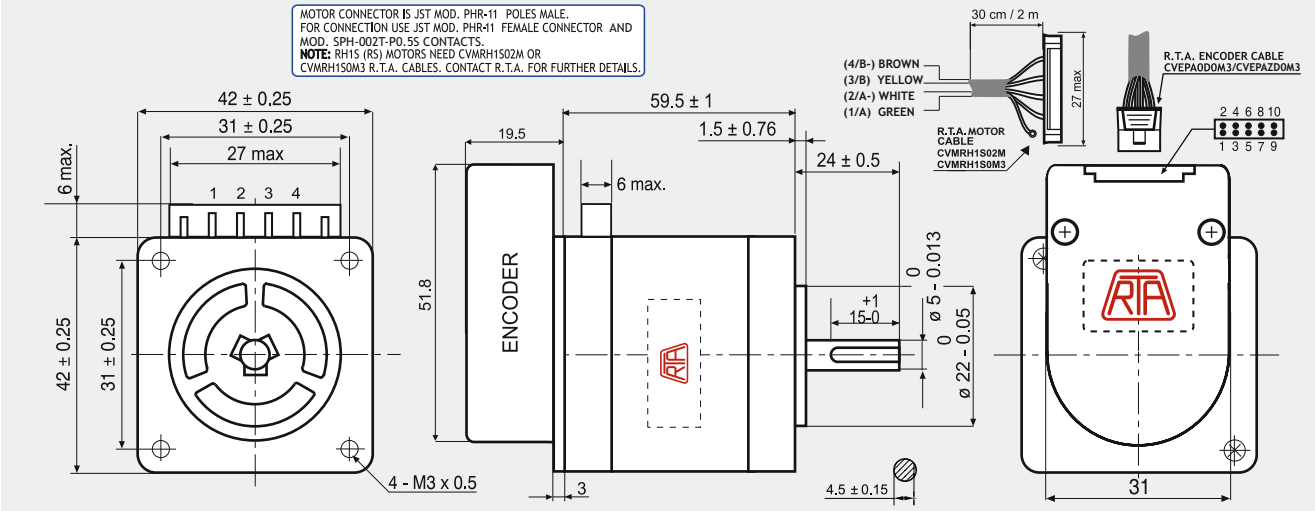

ENCODER OPTIONS:		RH 1S3H-04D0	RH 1S3H-04E0	RH 1S3H-0HE0
RESOLUTION		400 cpr	400 cpr	4000 cpr
INDEX		No	Yes	Yes
CURRENT CONSUMPTION	(mA)	50	50	85
HIGH LEVEL OUTPUT	(Volt)	5 (TIP) - 4.75 (MIN) (I_{MAX}=25mA)	3.4 (TIP) - 2.4 (MIN) (I_{MAX}=20mA)	3.4 (TIP) - 2.4 (MIN) (I_{MAX}=20mA)
LOW LEVEL OUTPUT	(Volt)	0.25 (TIP) - 0.6 (MAX) (I_{MAX}=25mA)	0.2 (TIP) - 0.4 (MAX) (I_{MAX}=20mA)	0.2 (TIP) - 0.4 (MAX) (I_{MAX}=20mA)
OUTPUT SIGNAL		Differential	Differential	Differential
MAXIMUM FREQUENCY	(KHz)	100	100	720
POWER SUPPLY VOLTAGE	(Volt)	5 V_{DC} ±10%	5 V_{DC} ±10%	5 V_{DC} ±10%

FEATURES

MODEL		RH 1S3H
BASIC STEP ANGLE		1.8 ± 0.09°
BIPOLAR CURRENT	(Amp)	2.3
UNIPOLAR CURRENT	(Amp)	
RESISTANCE	(Ohm)	1.2
INDUCTANCE	(mH)	3.0
BIPOLAR HOLDING TORQUE	(Ncm)	80
UNIPOLAR HOLDING TORQUE	(Ncm)	
ROTOR INERTIA	(Kgm ^{2} x 10 $^{-7}$)	94
THEORETICAL ACCELERATION	(rad x sec.$^{-2}$)	85100
BACK E.M.F.	(V/Krpm)	34.7
MASS	(Kg)	0.51
PROTECTION DEGREE		IP40
LEADS CODE		V

TORQUE/SPEED CURVE

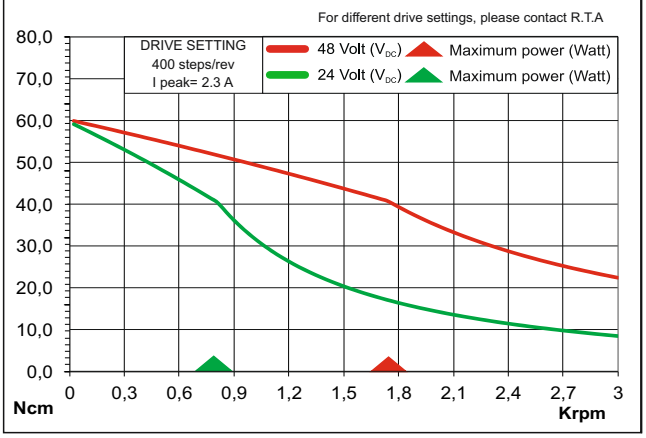

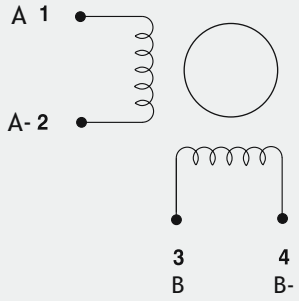

RTA MOTOR CABLE COLORS

DESCRIPTION	
CHANNEL A	GREEN
CHANNEL A-	WHITE
CHANNEL B	YELLOW
CHANNEL B-	BROWN

ENCODER PIN-OUT

DESCRIPTION	04D0 PINS	04E0/0HE0 PINS	R.T.A. CABLE LEADS COLOR
CHANNEL A+	6	6	GREEN
CHANNEL A-	5	5	PURPLE
CHANNEL B+	8	8	BLUE
CHANNEL B-	7	7	BROWN
+ DC (5V)	2	2	RED
GROUND	3	3	BLACK
INDEX+	/	10	ORANGE
INDEX-	/	9	WHITE
R.T.A. CABLE (30 cm)	CVEPA0D0M3	CVEPAZD0M3	

Suggested R.T.A. drive series: BSD, CSD, FLEX-DRIVE

SS2421-5041

PANCAKE TYPE motor

SANYO DENKI
SANMOTION

Dimensions (Unit:mm)

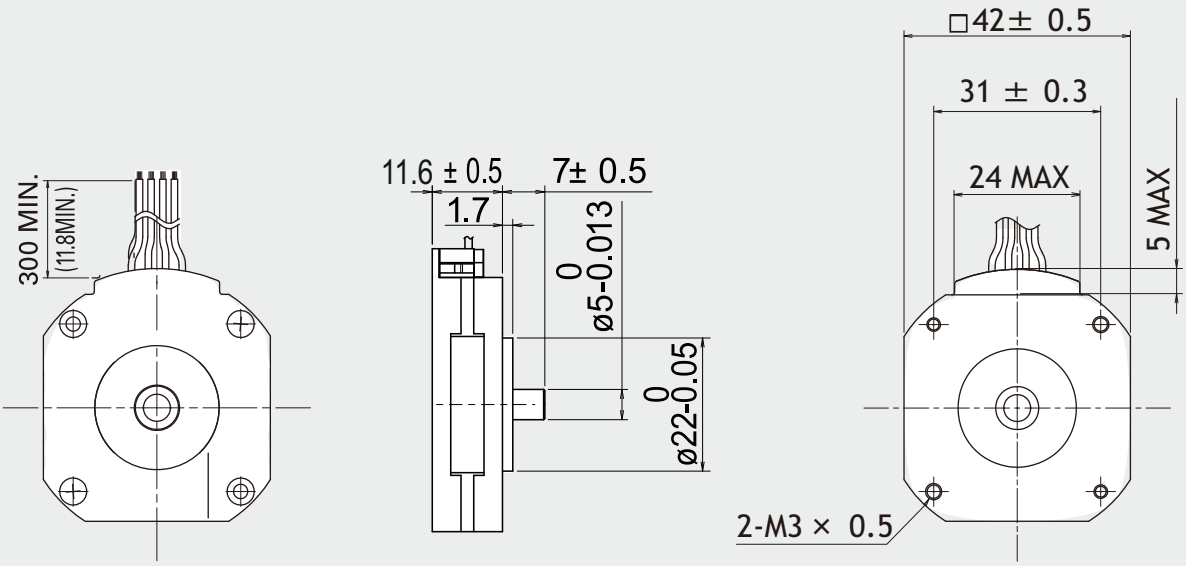

FEATURES

MODEL		SS2421-5041
BASIC STEP ANGLE		1.8° ± 0.09°
BIPOLAR CURRENT	(Amp)	1.0
UNIPOLAR CURRENT	(Amp)	
RESISTANCE	(Ohm)	3.5
INDUCTANCE	(mH)	1.2
BIPOLAR HOLDING TORQUE	(Ncm)	8.3
UNIPOLAR HOLDING TORQUE	(Ncm)	
ROTOR INERTIA	(Kgm ^{2} x 10 $^{-7}$)	0.015
THEORETICAL ACCELERATION	(rad x sec.$^{-2}$)	55000
BACK E.M.F.	(V/Krpm)	8.0
MASS	(Kg)	0.07

TORQUE/SPEED CURVE

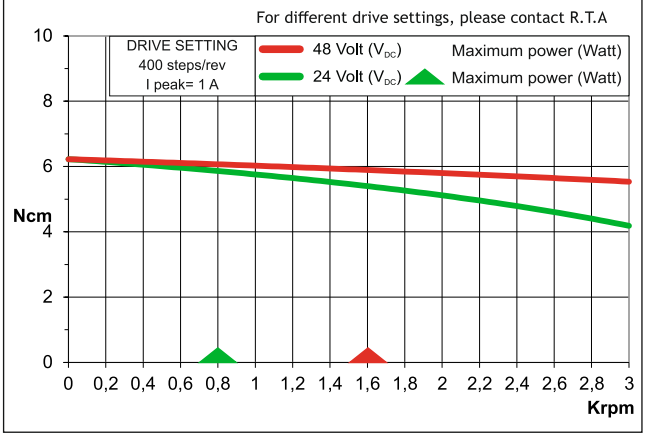

R.T.A. s.r.l. PAVIA (ITALY) SANYO DENKI CO.,Ltd (JAPAN)

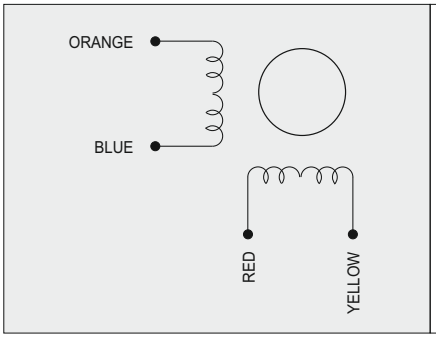

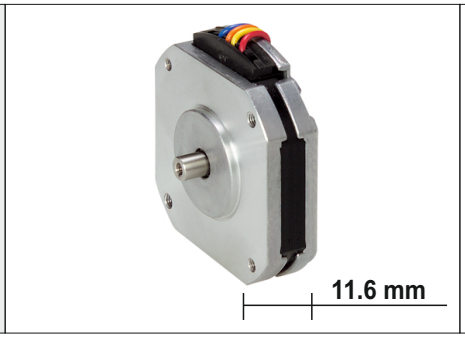

Suggested driver: contact R.T.A.

SS2422-5041

PANCAKE TYPE motor

SANYO DENKI
SANMOTION

Dimensions (Unit:mm)

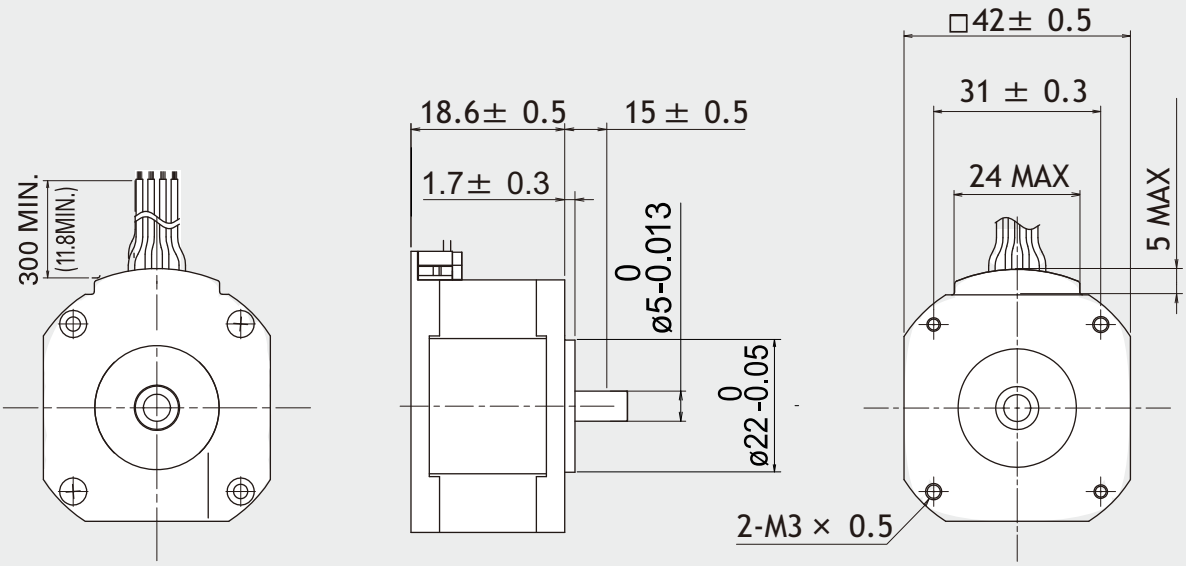

FEATURES

MODEL		SS2422-5041 (SS2422-5011)
BASIC STEP ANGLE		1.8° ± 0.09°
BIPOLAR CURRENT	(Amp)	1.0
UNIPOLAR CURRENT	(Amp)	
RESISTANCE	(Ohm)	5.4
INDUCTANCE	(mH)	2.9
BIPOLAR HOLDING TORQUE	(Ncm)	18.6
UNIPOLAR HOLDING TORQUE	(Ncm)	
ROTOR INERTIA	(Kgm ^{2} x 10 $^{-7}$)	0.028
THEORETICAL ACCELERATION	(rad x sec.$^{-2}$)	63000
BACK E.M.F.	(V/Krpm)	18
MASS	(Kg)	0.14

TORQUE/SPEED CURVE

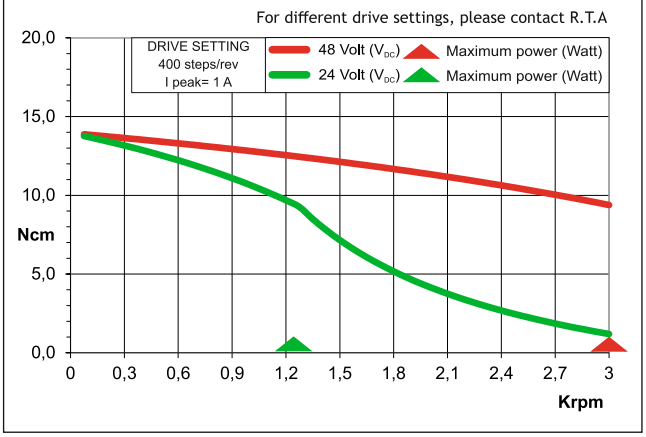

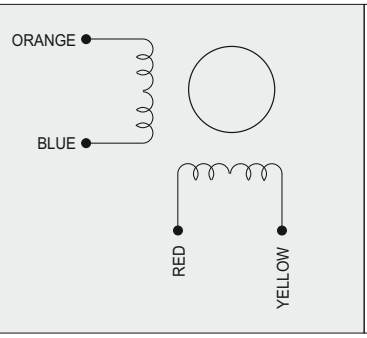

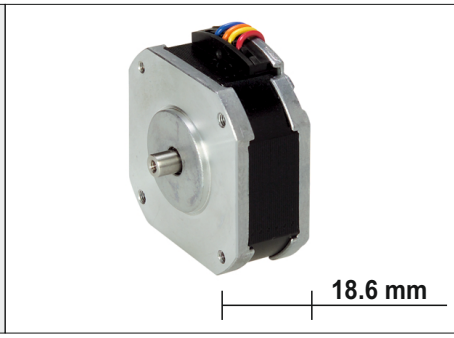

Suggested driver: contact R.T.A.

R.T.A. s.r.l. PAVIA (ITALY) SANYO DENKI CO.,Ltd (JAPAN)

RH 2S1M

Dimensions (Unit:mm)

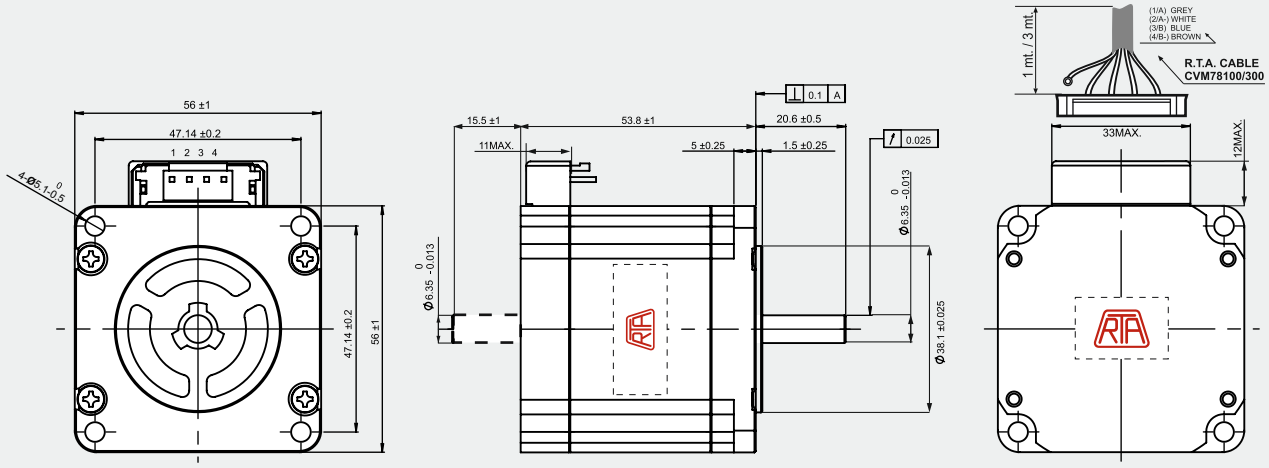

MOTOR CONNECTOR IS JST mod. B4P-VH 4 POLES MALE.
FOR CONNECTION USE JST mod. VHR-4N FEMALE CONNECTOR AND mod. SVH-21 T-P1.1 CONTACTS.
NOTE: RH2S (RS) MOTORS NEED CVM78100 AND CVM78300 R.T.A. CABLES. CONTACT R.T.A. FOR FURTHER DETAILS.

+ 30%
HOLDING TORQUE
THAN THE PREVIOUS «H» SERIES

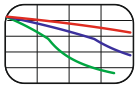

FEATURES

MODEL		RH 2S1M (RH 2S1M-RS)
BASIC STEP ANGLE		1.8 ± 0.09°
BIPOLAR CURRENT	(Amp)	4.0
UNIPOLAR CURRENT	(Amp)	
RESISTANCE	(Ohm)	0.37
INDUCTANCE	(mH)	1.5
BIPOLAR HOLDING TORQUE	(Ncm)	140
ROTOR INERTIA	(Kgm ^{2} x 10 $^{-7}$)	280
THEORETICAL ACCELERATION	(rad x sec.$^{-2}$)	50000
BACK E.M.F.	(V/Krpm)	35
MASS	(Kg)	0.69
INTERNATIONAL STANDARDS		UL, CSA
PROTECTION DEGREE		IP40
LEADS CODE		V

Codes between brackets refer to double shaft models.

TORQUE/SPEED CURVE

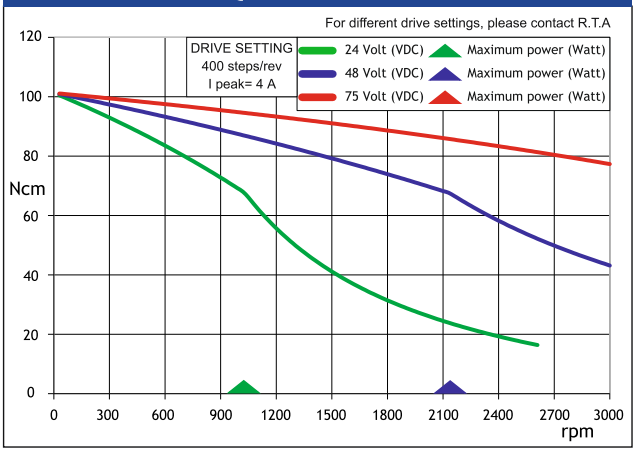

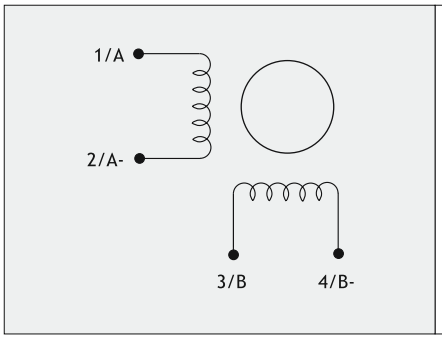

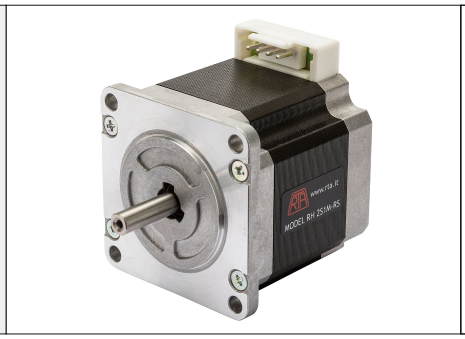

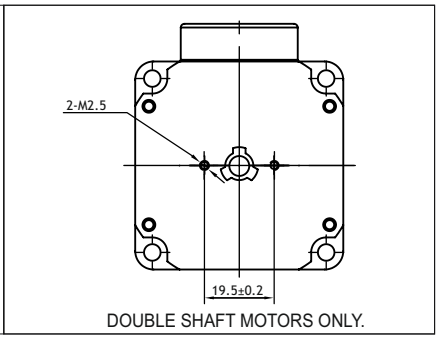

DOUBLE SHAFT MOTORS ONLY.

Suggested R.T.A. drive series: BSD, CSD, FLEX-DRIVE, NDC

RH 2S2M

Dimensions (Unit:mm)

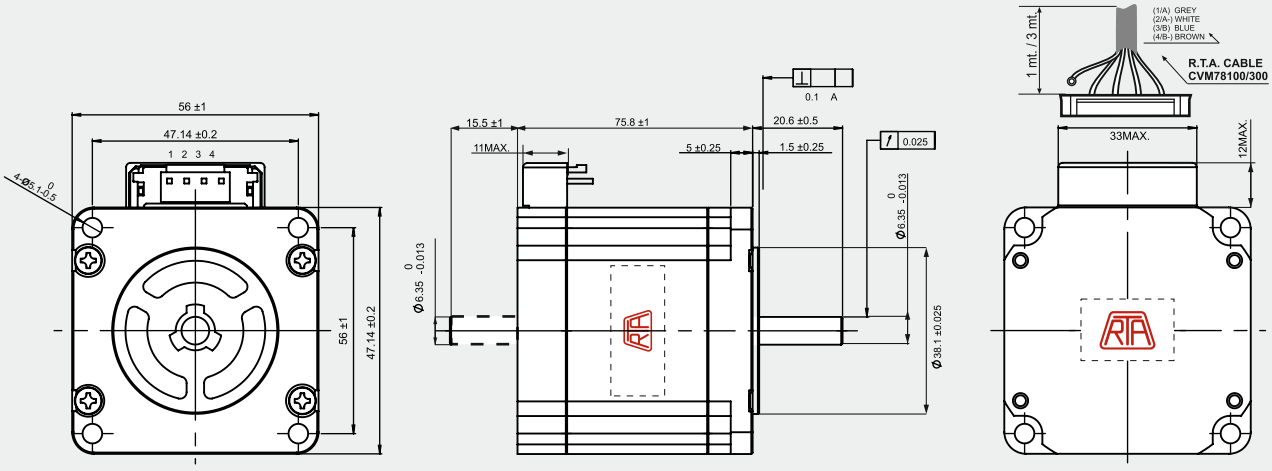

MOTOR CONNECTOR IS JST mod. B4P-VH 4 POLES MALE.
FOR CONNECTION USE JST mod. VHR-4N FEMALE CONNECTOR AND mod. SVH-21 T-P1.1 CONTACTS.
NOTE: RH2S (RS) MOTORS NEED CVM78100 AND CVM78300 R.T.A. CABLES. CONTACT R.T.A. FOR FURTHER DETAILS.

+ 40%
HOLDING TORQUE
THAN THE PREVIOUS «H» SERIES

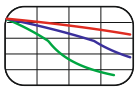

FEATURES

MODEL		RH 2S2M (RH 2S2M-RS)
BASIC STEP ANGLE		1.8 ± 0.09°
BIPOLAR CURRENT	(Amp)	4.0
UNIPOLAR CURRENT	(Amp)	
RESISTANCE	(Ohm)	0.52
INDUCTANCE	(mH)	2.4
BIPOLAR HOLDING TORQUE	(Ncm)	235
ROTOR INERTIA	(Kgm ^{2} x 10 $^{-7}$)	500
THEORETICAL ACCELERATION	(rad x sec.$^{-2}$)	47000
BACK E.M.F.	(V/Krpm)	58.7
MASS	(Kg)	1.1
INTERNATIONAL STANDARDS		UL, CSA
PROTECTION DEGREE		IP40
LEADS CODE		V

Codes between brackets refer to double shaft models.

TORQUE/SPEED CURVE

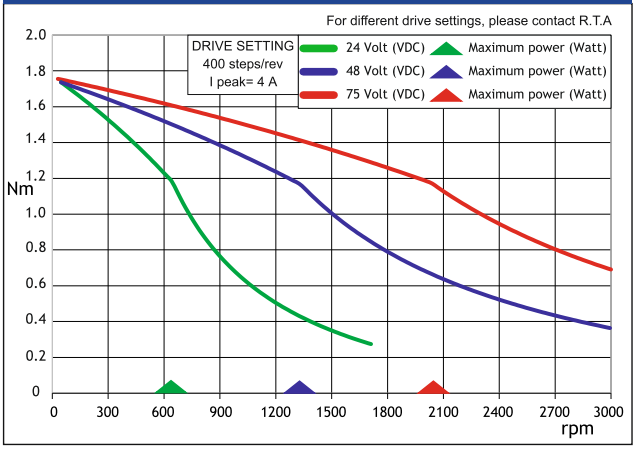

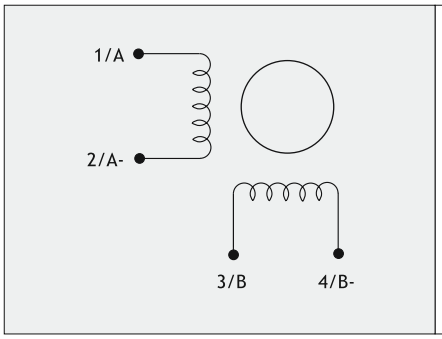

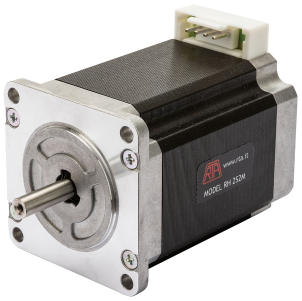

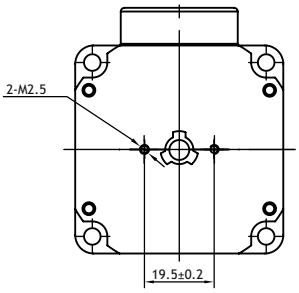

DOUBLE SHAFT MOTORS ONLY.

Suggested R.T.A. drive series: BSD, CSD, FLEX-DRIVE, NDC

RH 2S1M-0XX0

Dimensions (Unit:mm)

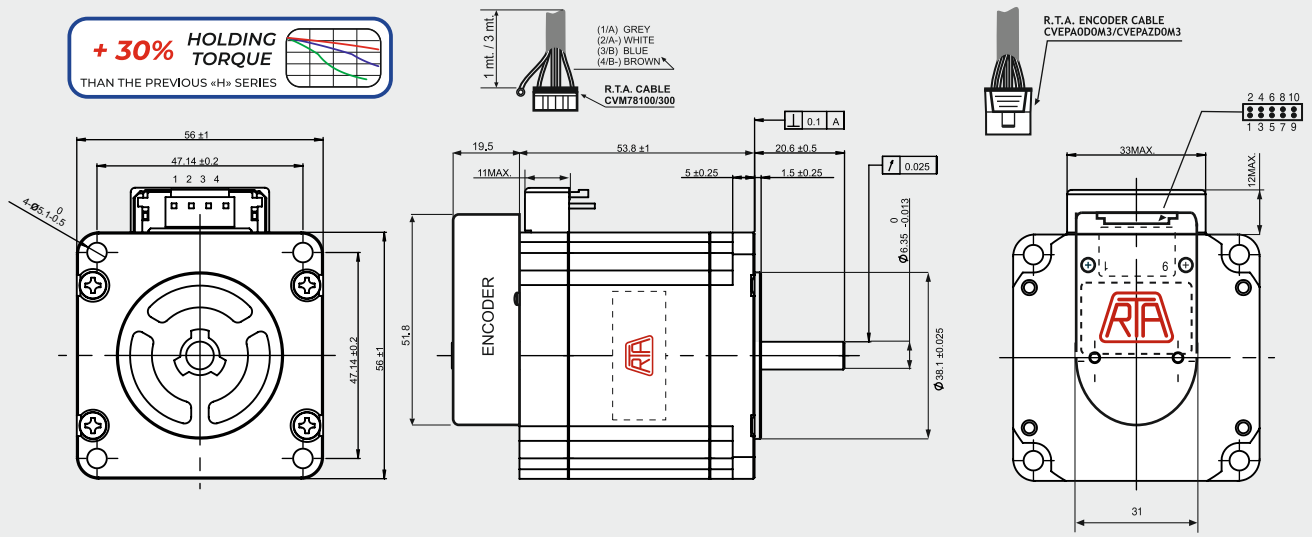

ENCODER OPTIONS:		RH 2S1M-04D0	RH 2S1M-04E0	RH 2S1M-0HE0
RESOLUTION		400 cpr	400 cpr	4000 cpr
INDEX		No	Yes	Yes
CURRENT CONSUMPTION	(mA)	50	50	85
HIGH LEVEL OUTPUT	(Volt)	5 (TIP) - 4.75 (MIN) (I_{MAX}=25mA)	3.4 (TIP) - 2.4 (MIN) (I_{MAX}=20mA)	3.4 (TIP) - 2.4 (MIN) (I_{MAX}=20mA)
LOW LEVEL OUTPUT	(Volt)	0.25 (TIP) - 0.6 (MAX) (I_{MAX}=25mA)	0.2 (TIP) - 0.4 (MAX) (I_{MAX}=20mA)	0.2 (TIP) - 0.4 (MAX) (I_{MAX}=20mA)
OUTPUT SIGNAL		Differential	Differential	Differential
MAXIMUM FREQUENCY	(KHz)	100	100	720
POWER SUPPLY VOLTAGE	(Volt)	5 V_{DC} ± 10%	5 V_{DC} ± 10%	5 V_{DC} ± 10%

ENCODER NEEDS CVEPA0D0M3 OR CVEPAZD0M3 R.T.A. CABLE. CONTACT R.T.A. FOR FURTHER DETAILS

FEATURES		
MODEL		**RH 2S1M-0XX0**
BASIC STEP ANGLE		1.8 ± 0.09°
BIPOLAR CURRENT	(Amp)	4.0
UNIPOLAR CURRENT	(Amp)	
RESISTANCE	(Ohm)	0.37
INDUCTANCE	(mH)	1.5
BIPOLAR HOLDING TORQUE	(Ncm)	140
UNIPOLAR HOLDING TORQUE	(Ncm)	
ROTOR INERTIA	(Kgm ² x 10 -7)	280
THEORETICAL ACCELERATION	(rad x sec.-2)	50000
BACK E.M.F.	(V/Krpm)	35
MASS	(Kg)	0 69
PROTECTION DEGREE		IP40
LEADS CODE		V

TORQUE SPEED/CURVE

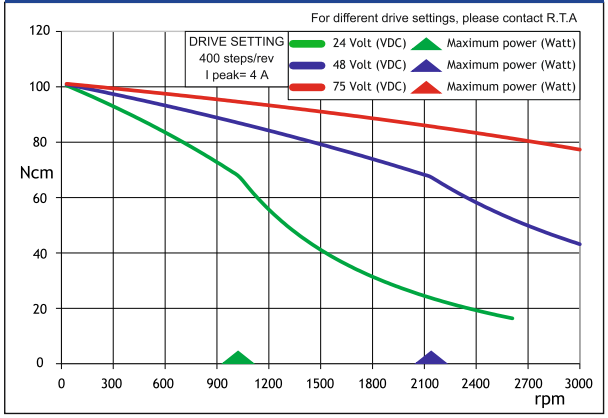

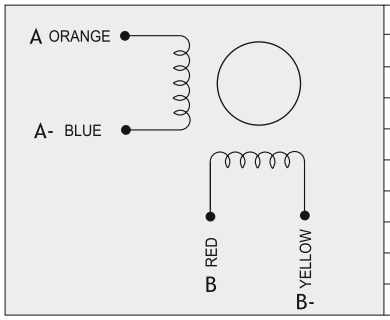

ENCODER PIN-OUT

DESCRIPTION	04D0 PINS	04E0 PINS	0HE0 PINS	R.T.A. CABLE LEADS COLOR
CHANNEL A+	6	6	6	GREEN
CHANNEL A-	5	5	5	PURPLE
CHANNEL B+	8	8	8	BLUE
CHANNEL B-	7	7	7	BROWN
+ DC (5V)	2	2	2	RED
GROUND	3	3	3	BLACK
INDEX+	/	10	10	ORANGE
INDEX-	/	9	9	WHITE

Suggested R.T.A. drive series: BSD, CSD, FLEX-DRIVE, NDC

RH 2S2M-0XX0

Dimensions (Unit:mm)

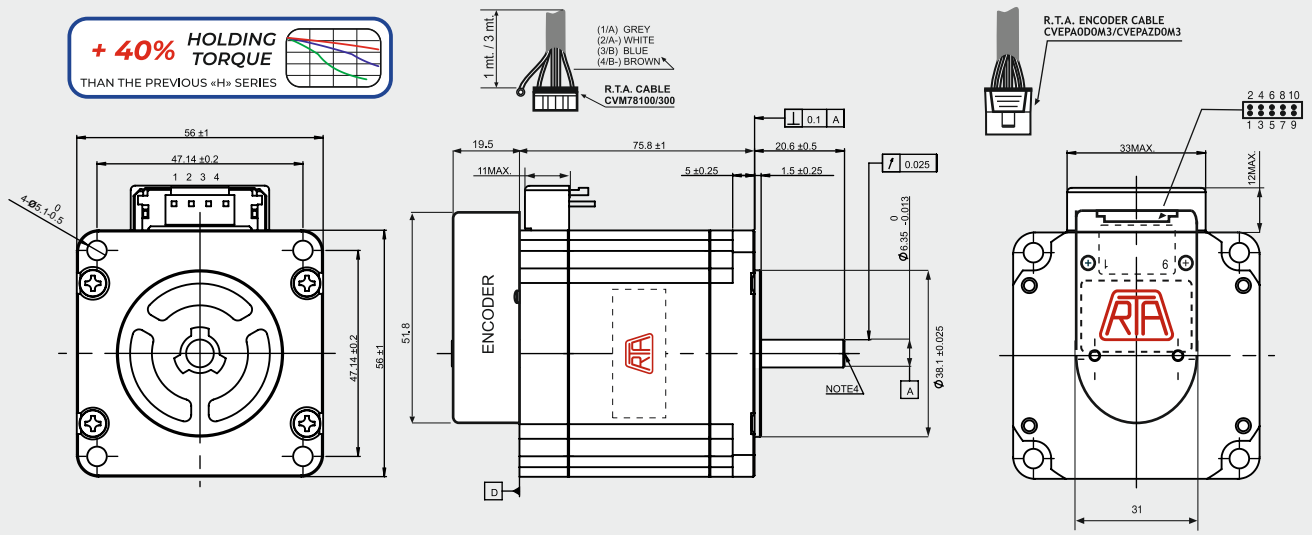

ENCODER OPTIONS:		RH 2S2M-04D0	RH 2S2M-04E0	RH 2S2M-0HE0
RESOLUTION		400 cpr	400 cpr	4000 cpr
INDEX		No	Yes	Yes
CURRENT CONSUMPTION	(mA)	50	50	85
HIGH LEVEL OUTPUT	(Volt)	5 (TIP) - 4.75 (MIN) (I_{MAX}=25mA)	3.4 (TIP) - 2.4 (MIN) (I_{MAX}=20mA)	3.4 (TIP) - 2.4 (MIN) (I_{MAX}=20mA)
LOW LEVEL OUTPUT	(Volt)	0.25 (TIP) - 0.6 (MAX) (I_{MAX}=25mA)	0.2 (TIP) - 0.4 (MAX) (I_{MAX}=20mA)	0.2 (TIP) - 0.4 (MAX) (I_{MAX}=20mA)
OUTPUT SIGNAL		Differential	Differential	Differential
MAXIMUM FREQUENCY	(KHz)	100	100	720
POWER SUPPLY VOLTAGE	(Volt)	5 V_{DC} ± 10%	5 V_{DC} ± 10%	5 V_{DC} ± 10%

ENCODER NEEDS CVEPA0D0M3 OR CVEPAZD0M3 R.T.A. CABLE. CONTACT R.T.A. FOR FURTHER DETAILS

FEATURES		
MODEL		**RH 2S2M-0XX0**
BASIC STEP ANGLE		1.8 ± 0.09°
BIPOLAR CURRENT	(Amp)	4.0
UNIPOLAR CURRENT	(Amp)	
RESISTANCE	(Ohm)	0.52
INDUCTANCE	(mH)	2.4
BIPOLAR HOLDING TORQUE	(Ncm)	235
UNIPOLAR HOLDING TORQUE	(Ncm)	
ROTOR INERTIA	(Kgm ^{2} x 10 $^{-7}$)	500
THEORETICAL ACCELERATION	(rad x sec.$^{-2}$)	47000
BACK E.M.F.	(V/Krpm)	58.7
MASS	(Kg)	1.1
PROTECTION DEGREE		IP40
LEADS CODE		V

TORQUE SPEED/CURVE

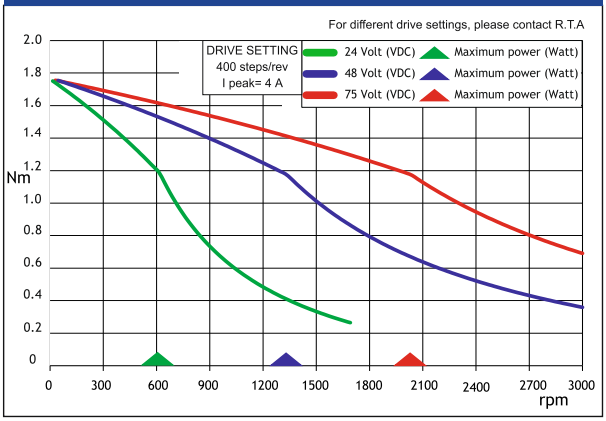

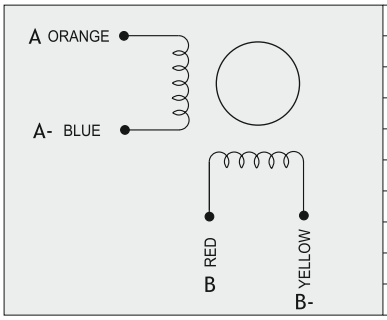

ENCODER PIN-OUT				
DESCRIPTION	04D0 PINS	04E0 PINS	0HE0 PINS	R.T.A. CABLE LEADS COLOR
CHANNEL A+	6	6	6	GREEN
CHANNEL A-	5	5	5	PURPLE
CHANNEL B+	8	8	8	BLUE
CHANNEL B-	7	7	7	BROWN
+ DC (5V)	2	2	2	RED
GROUND	3	3	3	BLACK
INDEX+	/	10	10	ORANGE
INDEX-	/	9	9	WHITE

Suggested R.T.A. drive series: BSD, CSD, FLEX-DRIVE, NDC

RM 3T1M-00HT

NEW!

BATTERY-LESS
ABSOLUTE ENCODER

Dimensions (Unit:mm)

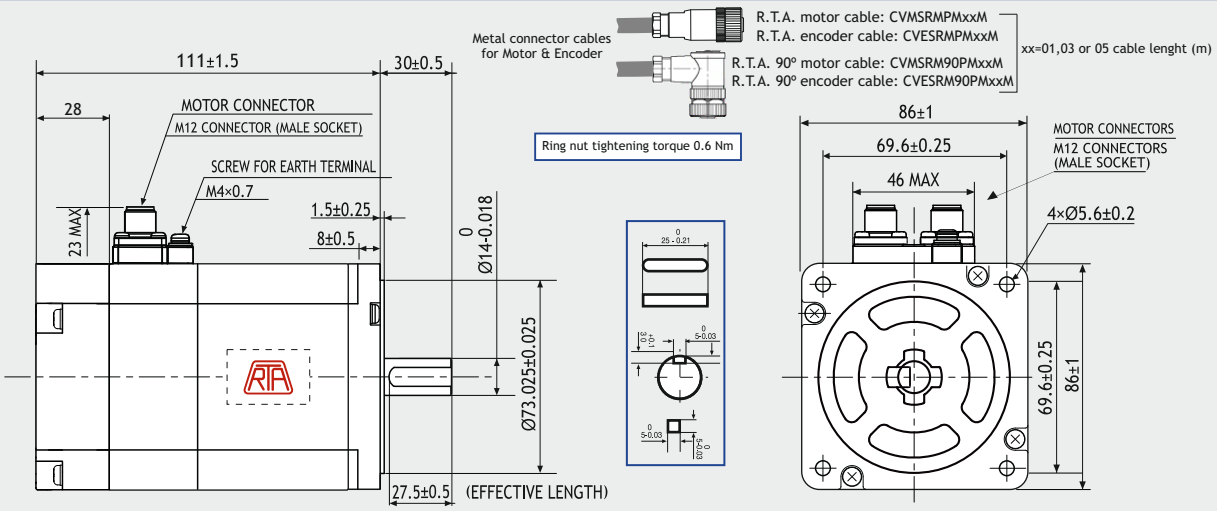

ENCODER FEATURES:

ENCODER MOTOR		RM 3T3M-00HT
RESOLUTION		DRIVE RELATED
MULTI-TURN RESOLUTION		2^{16}
CURRENT CONSUMPTION	(mA)	60
HIGH LEVEL OUTPUT	(Volt)	5 (TIP) - 4.75 (MIN)
LOW LEVEL OUTPUT	(Volt)	0.25 (TIP) - 0.6 (MAX)
OUTPUT SIGNAL		BiSS-C/SSI
POWER SUPPLY VOLTAGE	(Volt)	5 V_{DC} ± 10%

ENCODER CONNECTOR PIN-OUT

DESCRIPTION	X-PLUS AS4 C4 CON. PINS	M12 MOTOR PINS	RTA CABLE LEADS COLOR
CLOCK +	47	1	BLUE
CLOCK -	46	2	BROWN
DATA +	45	3	GREEN
DATA -	44	4	PURPLE
GND	48	5	BLACK
RESET	42	6	WHITE
NC	43	7	ORANGE
+ 5 VDC	41	8	RED

MOTOR FEATURES:

MODEL		RM 3T1M
BASIC STEP ANGLE		1.8 ± 0.09°
BIPOLAR CURRENT	(A)	4
RESISTANCE	(Ohm)	0.56
INDUCTANCE	(mH)	3.7
BIPOLAR HOLDING TORQUE	(Ncm)	360
ROTOR INERTIA	(Kgm ^{2} x 10 $^{-7}$)	1480
THEORETICAL ACCELERATION	(rad x sec.$^{-2}$)	24300
BACK E.M.F.	(V/Krpm)	90
MASS	(Kg)	1.95
INTERNATIONAL STANDARDS		UL, CSA, CE, RoHS
INSULATION VOLTAGE	(V)	250 V_{AC} (350 V_{DC})
PROTECTION DEGREE - INSULATION CLASS		IP 54 - CLASS F
LEADS CODE		V

TORQUE/SPEED CURVE

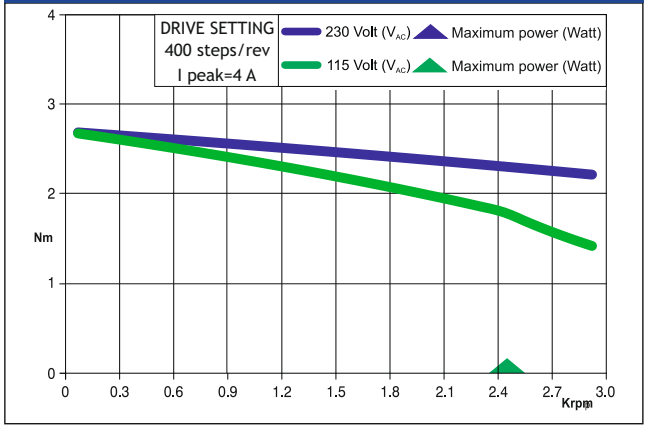

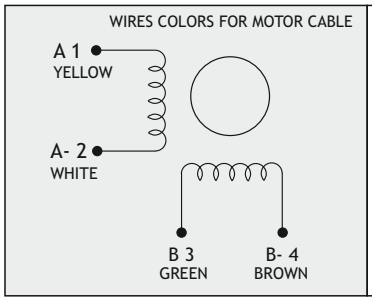

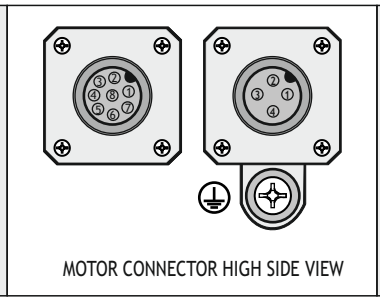

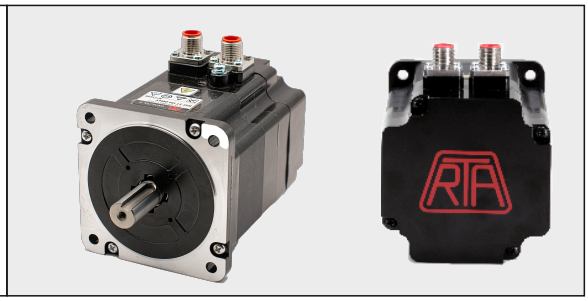

Only for R.T.A. 230 Vac X-PLUS AS4 drive



R.T.A. s.r.l. PAVIA (ITALY) SANYO DENKI CO.,Ltd (JAPAN)

RM 3T2M-00HT

NEW!

BATTERY-LESS
ABSOLUTE ENCODER

Dimensions (Unit:mm)

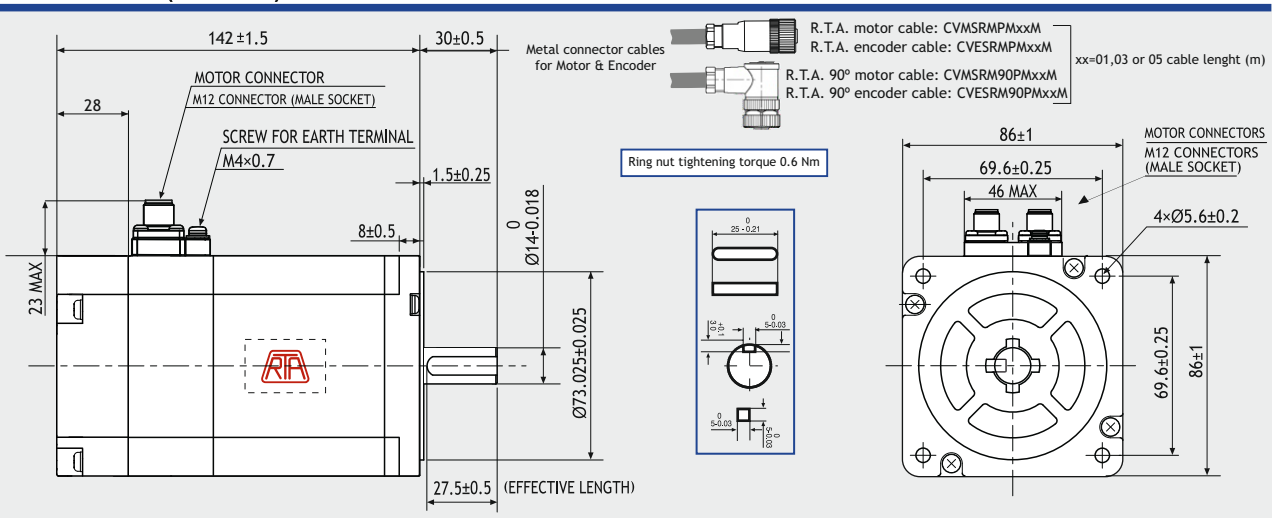

ENCODER FEATURES:

ENCODER MOTOR		RM 3T3M-00HT
RESOLUTION		DRIVE RELATED
MULTI-TURN RESOLUTION		2^{16}
CURRENT CONSUMPTION	(mA)	60
HIGH LEVEL OUTPUT	(Volt)	**5 (TIP) - 4.75 (MIN)**
LOW LEVEL OUTPUT	(Volt)	**0.25 (TIP) - 0.6 (MAX)**
OUTPUT SIGNAL		BiSS-C/SSI
POWER SUPPLY VOLTAGE	(Volt)	5 V_{DC} ± 10%

ENCODER CONNECTOR PIN-OUT

DESCRIPTION	X-PLUS AS4 C4 CON. PINS	M12 MOTOR PINS	RTA CABLE LEADS COLOR
CLOCK +	47	1	BLUE
CLOCK -	46	2	BROWN
DATA +	45	3	GREEN
DATA -	44	4	PURPLE
GND	48	5	BLACK
RESET	42	6	WHITE
NC	43	7	ORANGE
+ 5 VDC	41	8	RED

MOTOR FEATURES:

MODEL		RM 3T2M
BASIC STEP ANGLE		1.8 ± 0.09°
BIPOLAR CURRENT	(A)	4
RESISTANCE	(Ohm)	0.83
INDUCTANCE	(mH)	6.4
BIPOLAR HOLDING TORQUE	(Ncm)	700
ROTOR INERTIA	(Kgm ^{2} x 10 $^{-7}$)	3000
THEORETICAL ACCELERATION	(rad x sec.$^{-2}$)	23330
BACK E.M.F.	(V/Krpm)	175
MASS	(Kg)	3.1
INTERNATIONAL STANDARDS		UL, CSA, CE, RoHS
INSULATION VOLTAGE	(V)	250 V_{AC} (350 V_{DC})
PROTECTION DEGREE - INSULATION CLASS		IP 54 - CLASS F
LEADS CODE		V

TORQUE/SPEED CURVE

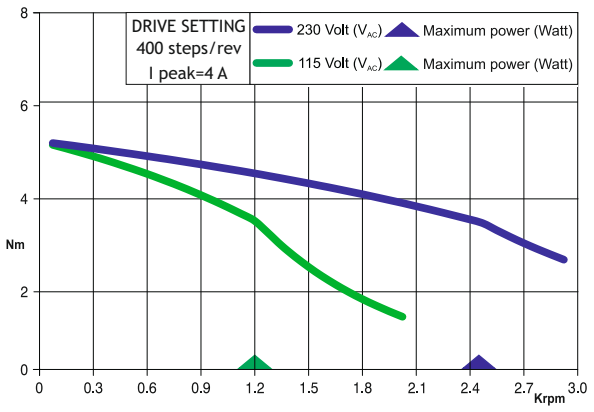

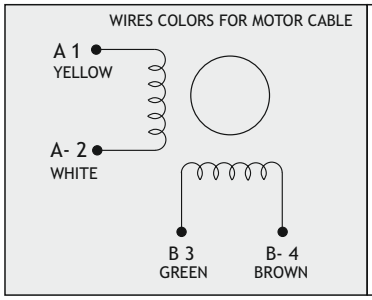

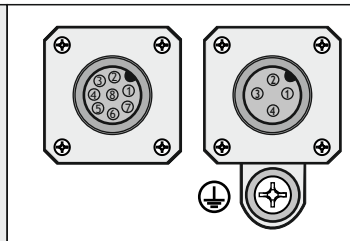

MOTOR CONNECTOR HIGH SIDE VIEW



Only for R.T.A. 230 Vac X-PLUS AS4 drive



R.T.A. s.r.l. PAVIA (ITALY) SANYO DENKI CO.,Ltd (JAPAN)

RM 3T3M-00HT

NEW!

BATTERY-LESS
ABSOLUTE ENCODER

Dimensions (Unit:mm)

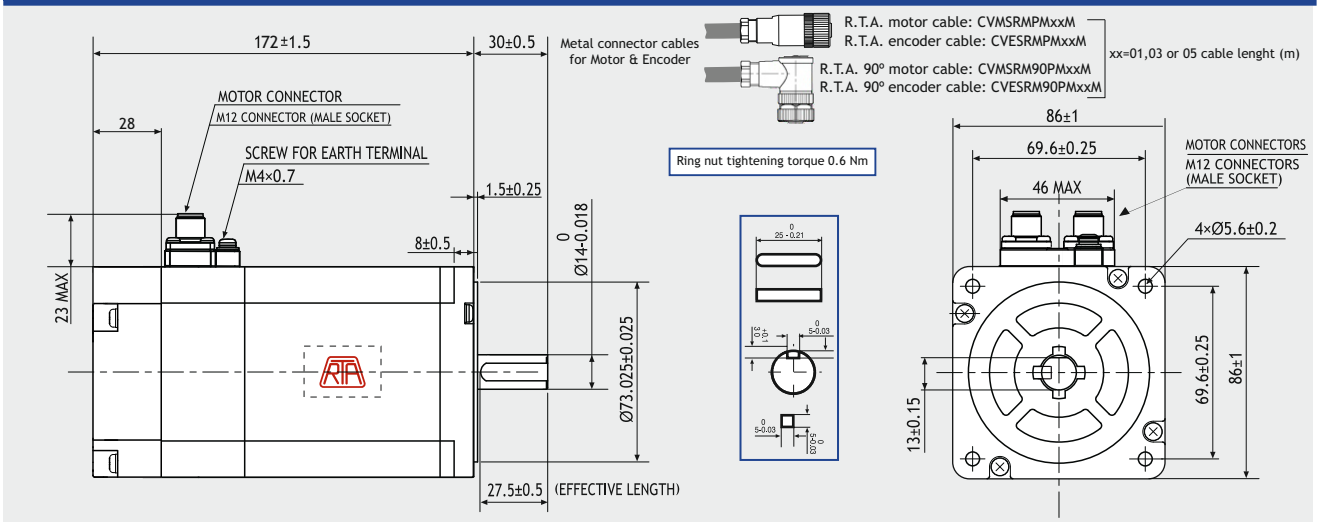

ENCODER FEATURES:

ENCODER MOTOR		RM 3T3M-00HT
RESOLUTION		DRIVE RELATED
MULTI-TURN RESOLUTION		2^{16}
CURRENT CONSUMPTION	(mA)	60
HIGH LEVEL OUTPUT	(Volt)	**5 (TIP) - 4.75 (MIN)**
LOW LEVEL OUTPUT	(Volt)	**0.25 (TIP) - 0.6 (MAX)**
OUTPUT SIGNAL		BiSS-C/SSI
POWER SUPPLY VOLTAGE	(Volt)	5 V_{DC} ± 10%

ENCODER CONNECTOR PIN-OUT

DESCRIPTION	X-PLUS AS4 C4 CON. PINS	M12 MOTOR PINS	RTA CABLE LEADS COLOR
CLOCK +	47	1	BLUE
CLOCK -	46	2	BROWN
DATA +	45	3	GREEN
DATA -	44	4	PURPLE
GND	48	5	BLACK
RESET	42	6	WHITE
NC	43	7	ORANGE
+ 5 VDC	41	8	RED

MOTOR FEATURES:

MODEL		RM 3T3M
BASIC STEP ANGLE		1.8 ± 0.09°
BIPOLAR CURRENT	(A)	4
RESISTANCE	(Ohm)	1
INDUCTANCE	(mH)	7.9
BIPOLAR HOLDING TORQUE	(Ncm)	920
ROTOR INERTIA	(Kgm ^{2} x 10 $^{-7}$)	4500
THEORETICAL ACCELERATION	(rad x sec.$^{-2}$)	20500
BACK E.M.F.	(V/Krpm)	241
MASS	(Kg)	4.2
INTERNATIONAL STANDARDS		UL, CSA, CE, RoHS
INSULATION VOLTAGE	(V)	250 V_{AC} (350 V_{DC})
PROTECTION DEGREE - INSULATION CLASS		IP 54 - CLASS F
LEADS CODE		V

TORQUE/SPEED CURVE

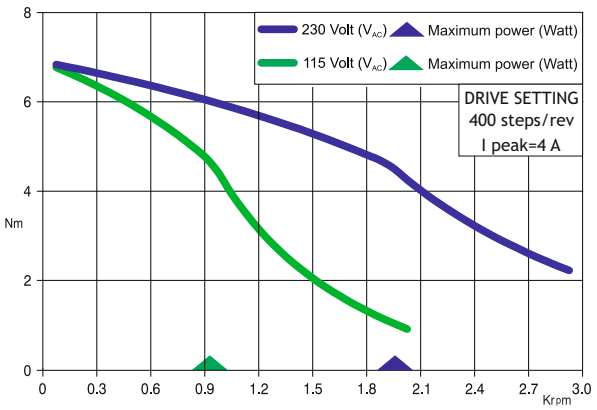

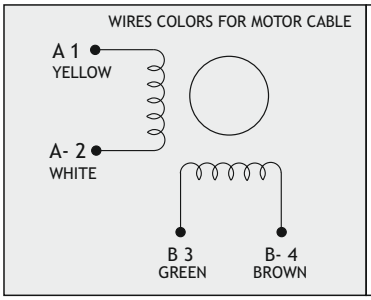

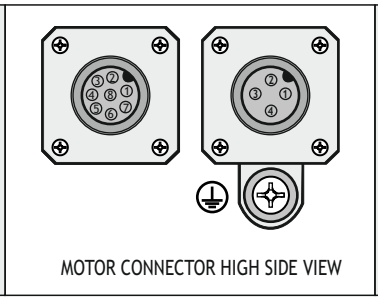



Only for R.T.A. 230 Vac X-PLUS AS4 drive



R.T.A. s.r.l. PAVIA (ITALY) SANYO DENKI CO.,Ltd (JAPAN)

EM 6H1M-0XX0

Dimensions (Unit:mm)

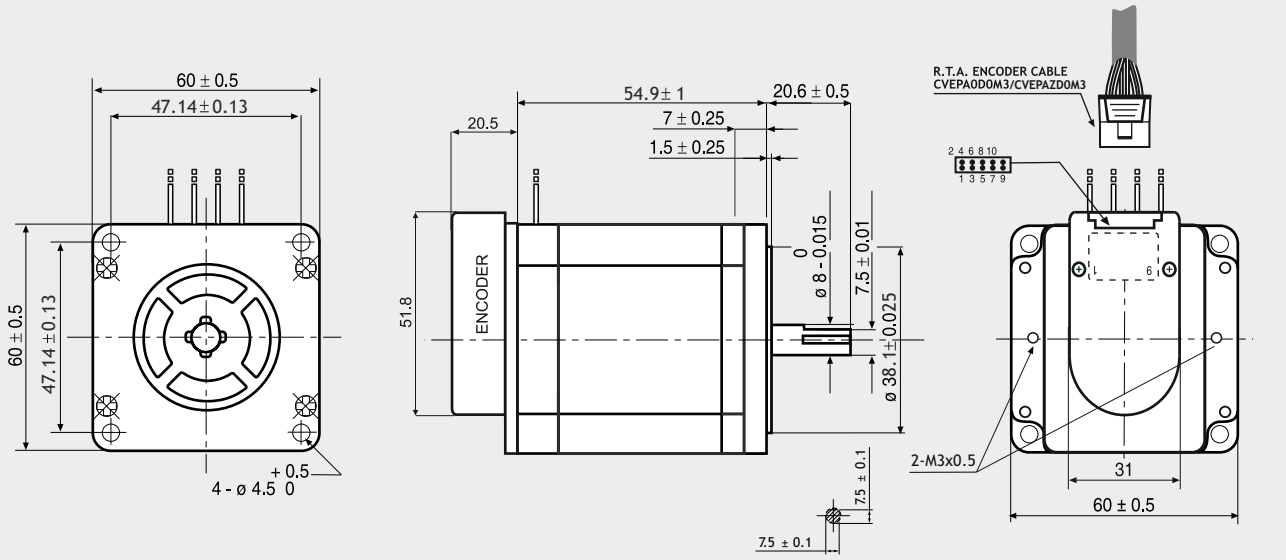

SANYO DENKI MOTOR FEATURES

MODEL		EM 6H1M-0XX0
SANYO DENKI MOTOR CODE		103-H7822-1731
BASIC STEP ANGLE		1.8° ± 0.09°
BIPOLAR PARALLEL CURRENT	(A)	4.0
RESISTANCE	(Ohm)	0.43
INDUCTANCE	(mH)	1.38
BIPOLAR HOLDING TORQUE	(Ncm)	137
ROTOR INERTIA	($Kgm^2 \times 10^{-7}$)	400
THEORETICAL ACCELERATION	(rad × $sec.^{-2}$)	34200
BACK E.M.F.	(V/Krpm)	43
MASS	(Kg)	1.3
LEADS CODE		V

TORQUE/SPEED CURVE

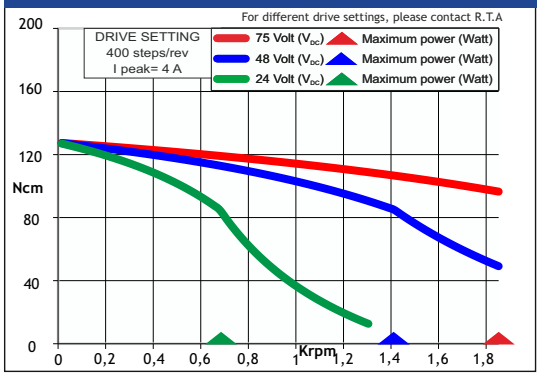

R.T.A. s.r.l. PAVIA (ITALY) SANYO DENKI CO.,Ltd (JAPAN)

ENCODER OPTIONS:		EM 6H1M-04D0	EM 6H1M-04E0	EM 6H1M-0HE0
RESOLUTION		400 cpr	400 cpr	4000 cpr
INDEX		No	Yes	Yes
CURRENT CONSUMPTION	(mA)	50	50	85
HIGH LEVEL OUTPUT	(Volt)	5 (TIP) - 4.75 (MIN) (I_{MAX}=25mA)	3.4 (TIP) - 2.4 (MIN) (I_{MAX}=20mA)	3.4 (TIP) - 2.4 (MIN) (I_{MAX}=20mA)
LOW LEVEL OUTPUT	(Volt)	0.25 (TIP) - 0.6 (MAX) (I_{MAX}=25mA)	0.2 (TIP) - 0.4 (MAX) (I_{MAX}=20mA)	0.2 (TIP) - 0.4 (MAX) (I_{MAX}=20mA)
OUTPUT SIGNAL		Differential	Differential	Differential
MAXIMUM FREQUENCY	(KHz)	100	100	720
POWER SUPPLY VOLTAGE	(Volt)	5 V_{DC} ± 10%	5 V_{DC} ± 10%	5 V_{DC} ± 10%

ENCODER NEEDS CVEPA0D0M3 OR CVEPAZD0M3 R.T.A. CABLE. CONTACT R.T.A. FOR FURTHER DETAILS

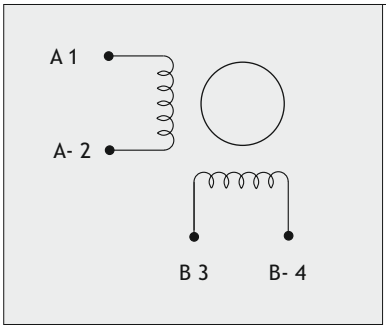

ENCODER PIN-OUT

DESCRIPTION	04D0 PINS	04E0 PINS	0HE0 PINS	R.T.A. CABLE LEADS COLOR
CHANNEL A+	6	6	6	GREEN
CHANNEL A-	5	5	5	PURPLE
CHANNEL B+	8	8	8	BLUE
CHANNEL B-	7	7	7	BROWN
+ DC (5V)	2	2	2	RED
GROUND	3	3	3	BLACK
INDEX+	/	10	10	ORANGE
INDEX-	/	9	9	WHITE
R.T.A. CABLE	CVEPA0D0M3	CVEPAZD03M	CVEPAZD03M	

Suggested R.T.A. drive series: BSD, CSD, NDC, ADW, FLEX-DRIVE

STEPPING MOTORS ACCESSORIES

FRONT BRAKES

FB-M12-17-02-00000

FRONT BRAKES

M12 CONNECTOR

24 VDC

NEMA 17



SCAN THE QR CODE TO WATCH A VIDEO ON FB SERIES FRONT BRAKES

Dimensions (Units:mm)

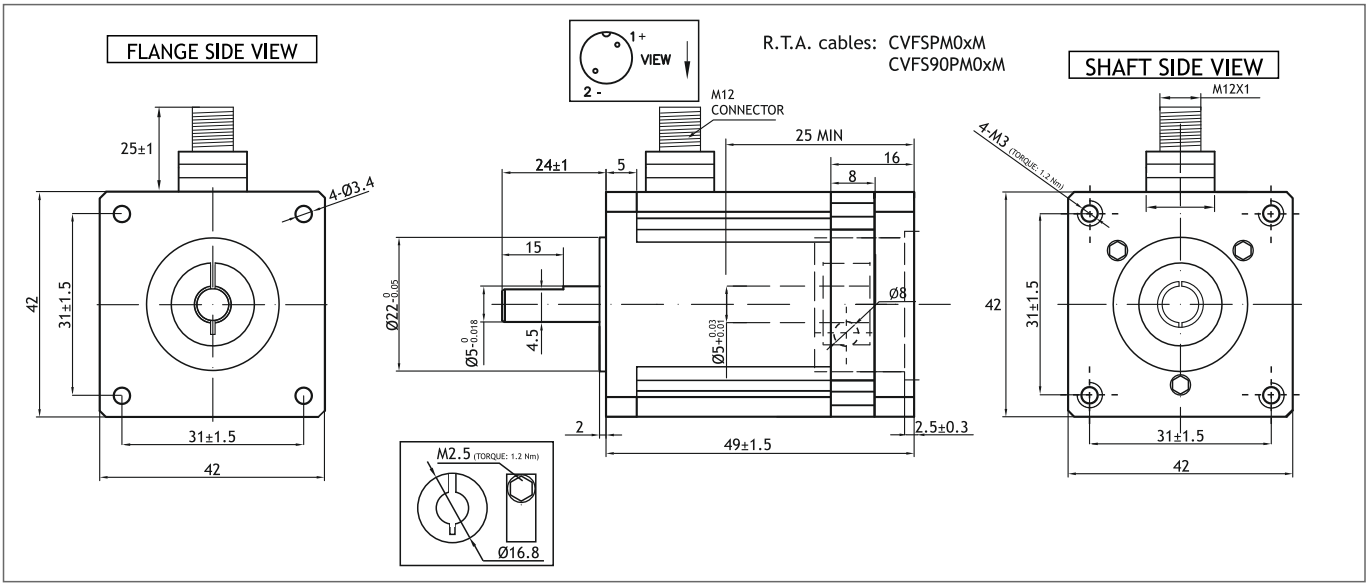

MODEL	Static torque (Nm)	Current (mA)	Voltage (V)	Power (W)	Mass (Kg)
FB-M12-17-02-00000	0.2	170	24 VDC	4.1	0.27

Suggested motors and cables

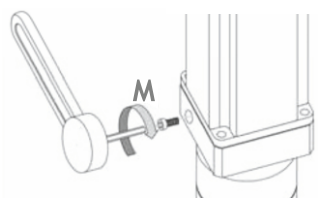

NEMA 17 motors



R.T.A. cables



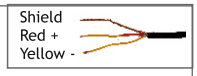

CVFSPM0xM x=1m/3m



CVFS90PM0xM x=1m/3m

MOUNTING OPERATION MODE: ■ Tightening torque M= 1.2 Nm ■ Locking bolt M5 ■ R.T.A. Quality Control

CAUTION

Use for safety related functions is forbidden (EN 60204-1). Moreover, when the application arrangement is in such way that a brake fault or failure could generate a risk for property or human life, external independent safety protection system must be provided in the machine.

FB-M12-23-08-00000

FRONT BRAKES

M12 CONNECTOR

24 VDC

NEMA 23



SCAN THE QR CODE TO WATCH A VIDEO ON FB SERIES FRONT BRAKES

Dimensions (Units:mm)

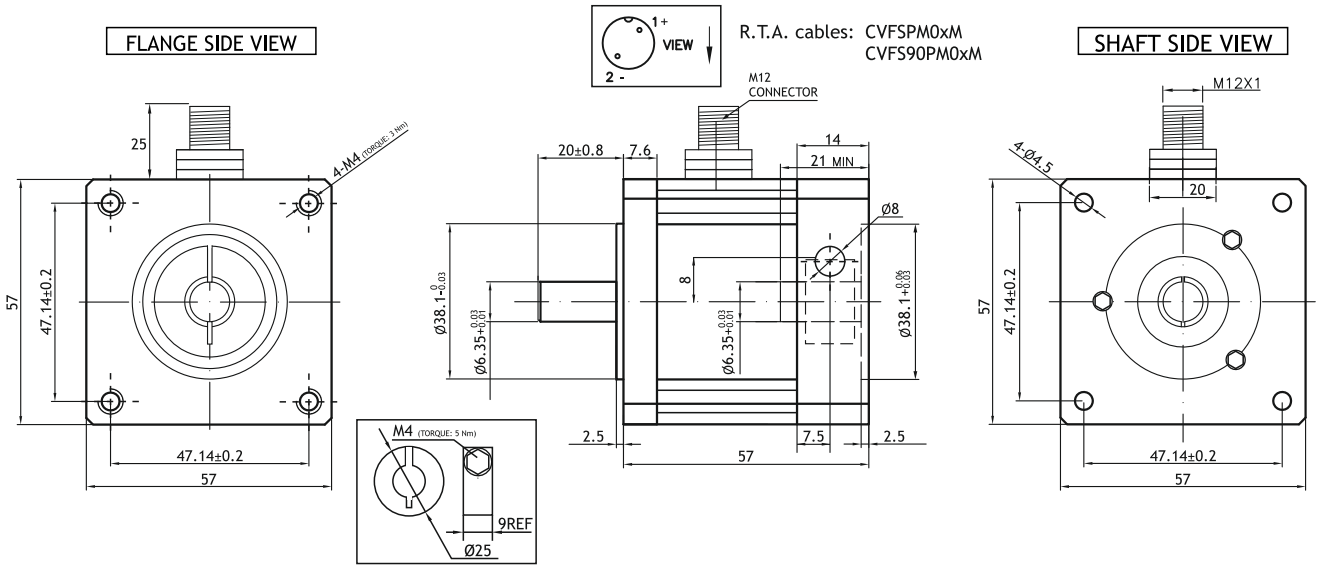

MODEL	Static torque (Nm)	Current (mA)	Voltage (V)	Power (W)	Mass (Kg)
FB-M12-23-08-00000	0.8	340	24 VDC	8.1	0.63

Suggested motors and cables

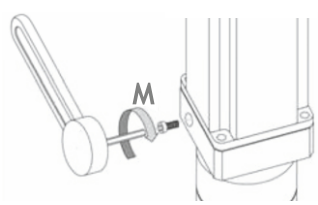

NEMA 23 motors

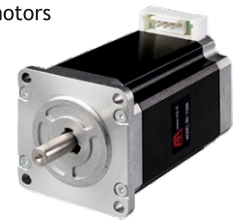

R.T.A. cables



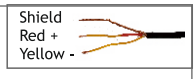

CVFSPM0xM x=1m/3m



CVFS90PM0xM x=1m/3m

MOUNTING OPERATION MODE: ■ Tightening torque M= 5 Nm ■ Locking bolt M4 ■ R.T.A. Quality Control

CAUTION

Use for safety related functions is forbidden (EN 60204-1). Moreover, when the application arrangement is in such way that a brake fault or failure could generate a risk for property or human life, external independent safety protection system must be provided in the machine.



SERVO SYSTEMS

SANMOTION G AC SERVO SYSTEMS

EtherCAT®

SIL3 SAFE TORQUE OFF (STO)

c UL us

7th gen

2-Axis Integrated AC Servo Amplifier

G SERIES AC SERVOAMPLIFIERS - EtherCAT INTERFACE

Why one 2-Axis servo amplifier is better than two 1-Axis servo amplifiers

- **Compact & lighter** than 2 servodrives
- **Reduced wiring**
- **Energy savings**
  The regenerative energy generated during the deceleration of one axis can be effectively reused to power the other axis
- Two axes can be **operated in Sync** and with simple commands
  A clever solution
- Two different motor powers can be controlled
  Tailor-made for customer needs

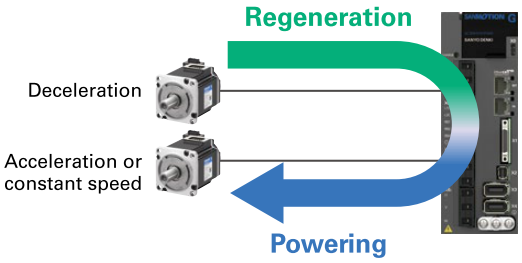



Main features

- Safe Torque Off (STO) function - SIL3 [Performance Level - PL = E]
- Mode of Operations: Homing Mode, Profile Velocity Mode, Profile Position Mode, Profile Torque Mode, Cycle Sync Position Mode, Cycle Sync Velocity Mode, Cycle Sync Torque Mode
- Axis 1/2 compatible with absolute encoder
- XML file available
- Speed frequency response of 3.5 kHz

TECHNICAL DATA		
MODEL	GADWA22AH14	GADWA33AH14
CURRENT CAPACITY	20 Amp x 2 axes	30 Amp x 2 axes
MAX COMPATIBLE MOTOR OUTPUT	800 W	1.5 kW
LOGIC POWER SUPPLY	Single-phase from 200VAC to 240 VAC (+10%, -15%) 50/60 Hz (± 3 Hz)	
POWER SUPPLY VOLTAGE	Single-phase or three-phase (configurable by the user) 200VAC or 240 VAC (+10%, -15%) 50/60 Hz (± 3 Hz)	

SANMOTION G
AC SERVO SYSTEMS

EtherCAT®

SIL3
SAFE TORQUE OFF (STO)

c UL us

2-Axis Integrated AC Servo Amplifier

G SERIES AC SERVOAMPLIFIERS - EtherCAT INTERFACE

GADWA22AH14

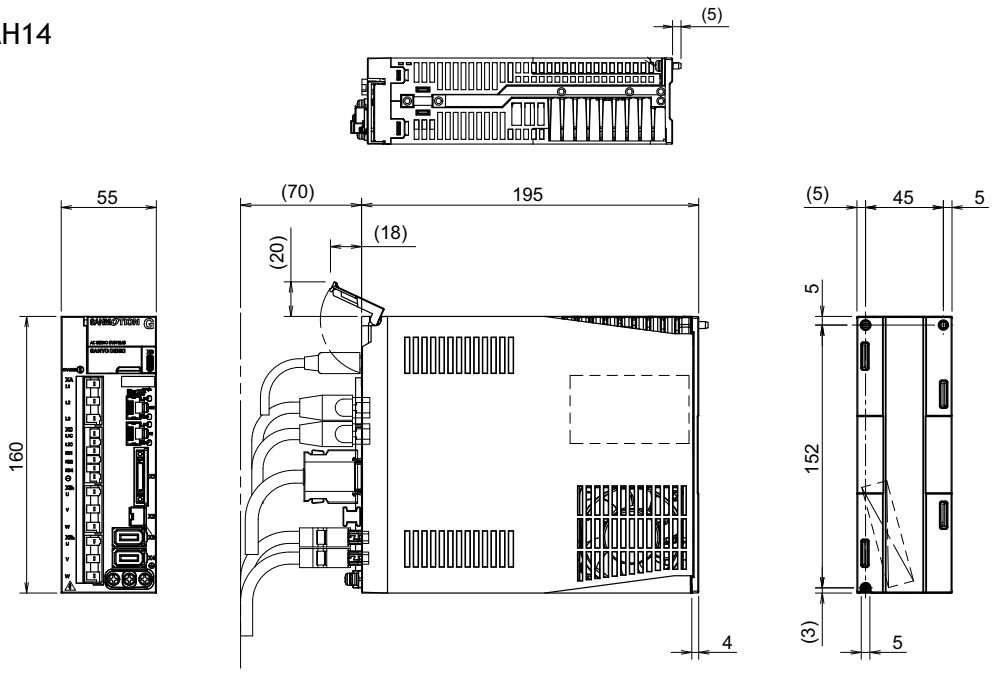

GADWA33AH14

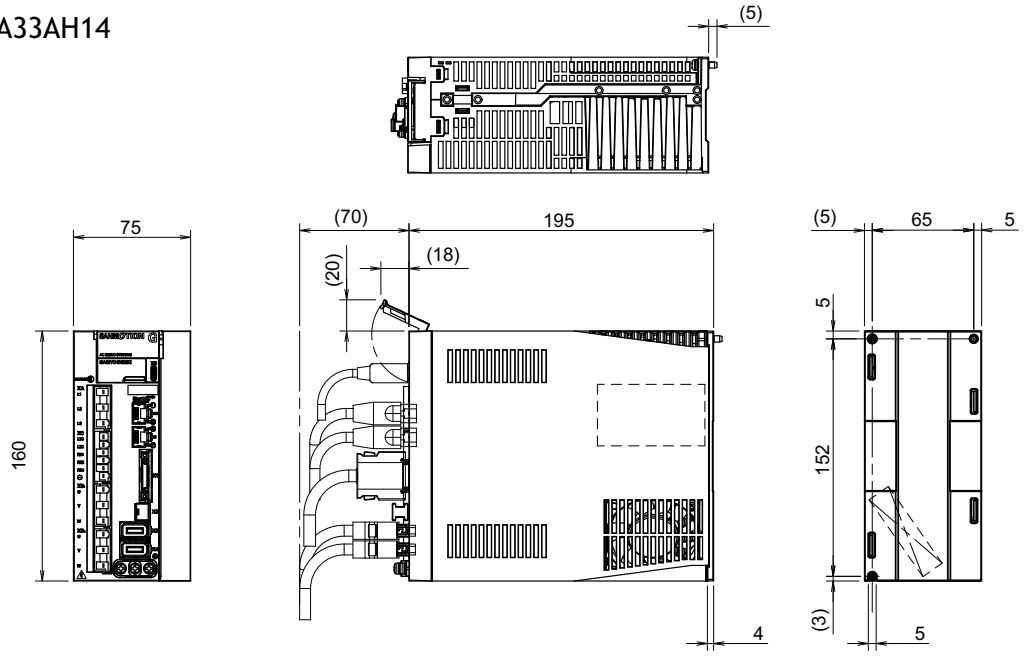

Dimensions mm.

SANMOTION G
AC SERVO SYSTEMS

EtherCAT®

SIL3
SAFE TORQUE OFF (STO)

c UL us

7th gen

230 VAC G SERVOAMPLIFIERS

EtherCAT INTERFACE

FIVE DIGIT DISPLAY: It allows to monitor in real time the amplifier status

Fast Plug-in connector

PC CONNECTOR: The amplifier can be set and monitored by SanMotion motor setup and a Personal Computer USB 3.0 interface

POWER CONNECTION: 230 VAC, single-phase / three-phase;
Built-in protection circuits against overload and input overvoltage

EtherCAT INTERFACE CONNECTOR: RJ45 - CAT5e

Regenerative internal resistor or external regenerative resistor (optional);
Regenerative resistor and logic power supply connector

I/O CONNECTOR: 7 inputs and 2 outputs
Encoder output repetition connector NEW!

SAFE TORQUE OFF - SIL3 Pl=e CONNECTOR SIL3

MOTOR POWER CONNECTOR (U-V-W phases)

ENCODER CONNECTOR (X3)

SECOND ENCODER CONNECTOR (X4) for external linear scale to avoid backlash

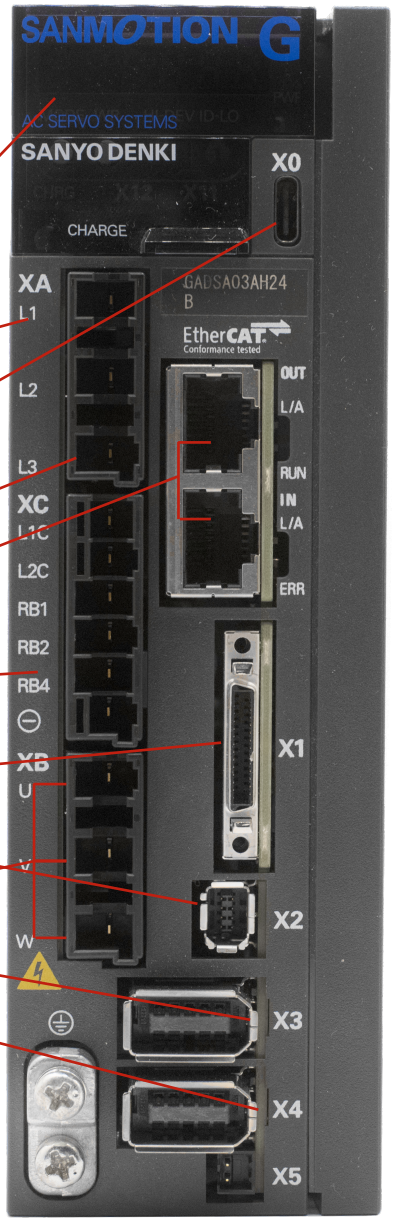

Model GADSA03AH24
Dimensions: (50x160x130)

MAIN FEATURES

- Safe Torque Off (STO) function - SIL3 [Performance Level - PL = E]
- Mode of Operations: Homing Mode, Profile Velocity Mode, Profile Position Mode, Profile Torque Mode, Cycle Sync Position Mode, Cycle Sync Velocity Mode, Cycle Sync Torque Mode
- One single amplifier size covers from 100 W to 1.5 kW motors
- XML file available
- Speed frequency response of 3.5 kHz

TECHNICAL DATA	
MODEL	GADSA03AH24
CURRENT CAPACITY	30 Amp
POWER SUPPLY VOLTAGE	Single-phase or three-phase (configurable by the user) 200VAC or 230 VAC (+10%, -15%) 50/60 Hz (± 3 Hz)
LOGIC POWER SUPPLY	Single-phase from 200VAC to 230 VAC (+10%, -15%) 50/60 Hz (± 3 Hz)
MAX COMPATIBLE MOTOR OUTPUT	1.5 kW
DIMENSIONS (mm)	50x160x130
Mass (kg)	0.90 kg

200 VAC G SERVOAMPLIFIERS

G SERIES AC SERVOAMPLIFIERS - EtherCAT INTERFACE

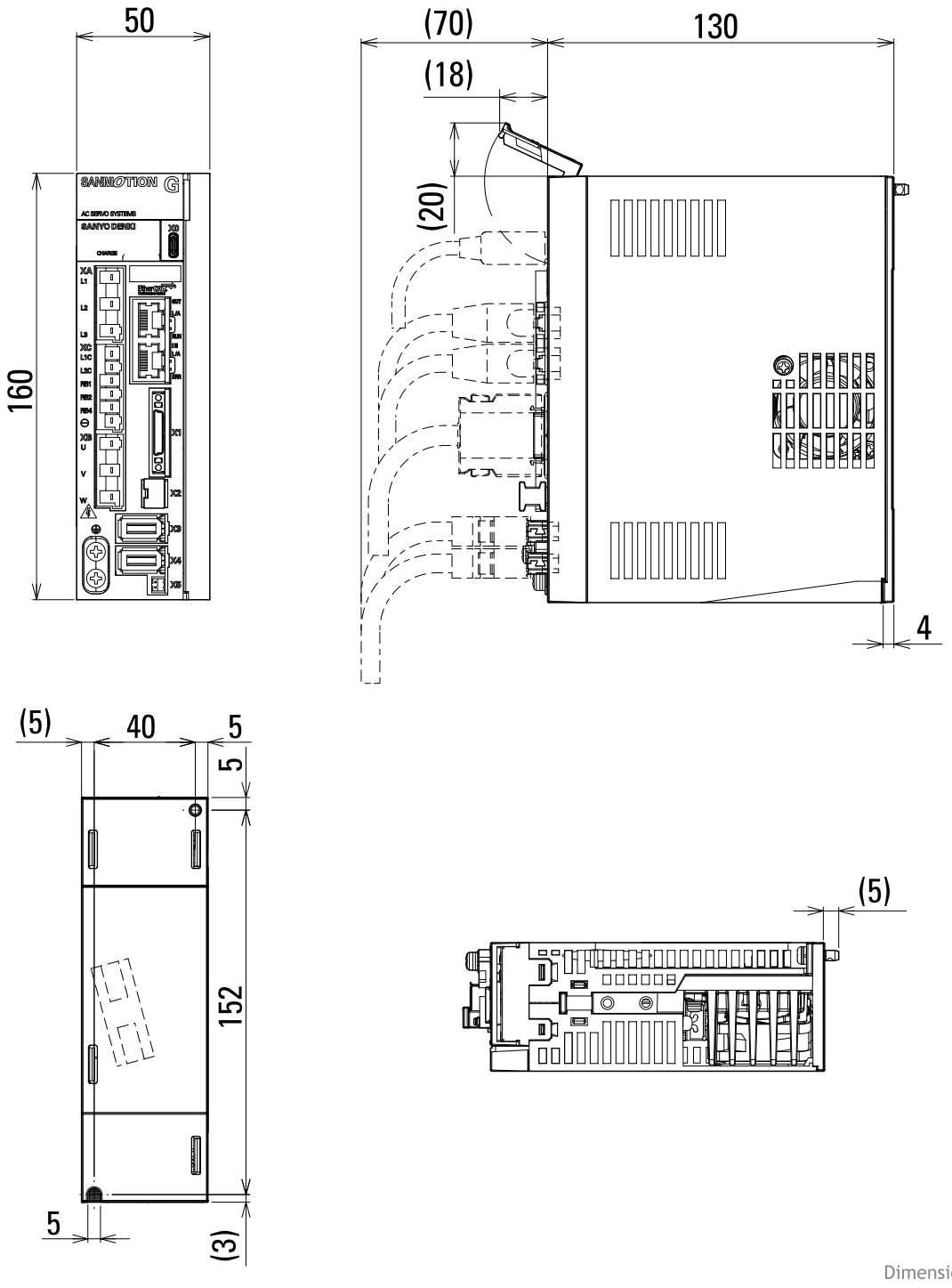

Dimensions mm.

SANMOTION AC SERVO SYSTEMS RS3 | 230 VAC | SIL3 SAFE TORQUE OFF (STO) | EtherCAT

3rd GENERATION!

230 VAC SERVOAMPLIFIERS

ADVANCED SAFETY MODULE

RS3 SERIES AC SERVOAMPLIFIERS - EtherCAT INTERFACE & STO

Dimensions: (60x160x130)
Model RS3A03A2HAE

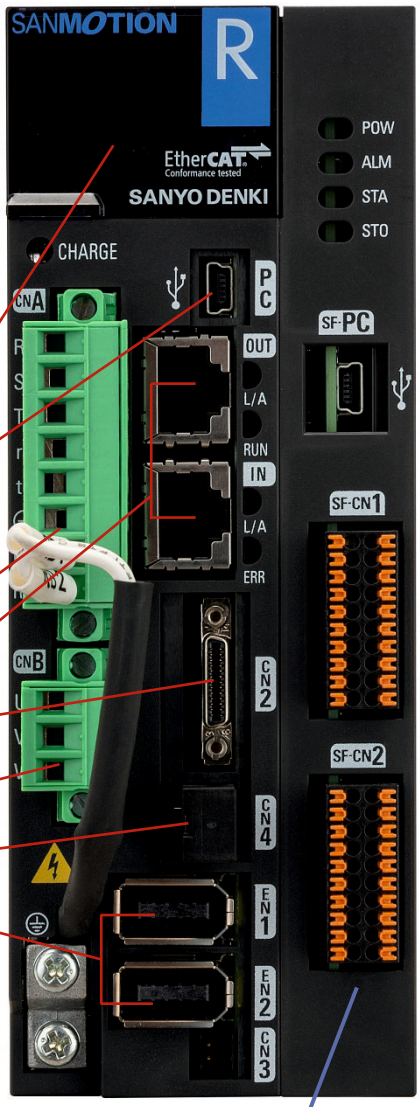

FIVE DIGIT DISPLAY: It allows to monitor amplifier and EtherCAT Network.

PC CONNECTOR: The amplifier can be set and monitored by means of Personal Computer USB interface.

POWER CONNECTOR: 230VAC, single-phase or three-phase (configurable by user). Power sections kept separated for logic/signal and power. Built-in protection circuits against overload and input overvoltage.
Internal regenerative resistor. External regenerative resistor (optional)

EtherCAT INTERFACE CONNECTOR: RJ45 - CAT5e.

I/O CONNECTOR: 7 inputs and 2 outputs.

MOTOR POWER CONNECTOR - CONNETTORE POTENZA MOTORE

! SAFE TORQUE OFF SIL3 CONNECTOR

! **SECOND ENCODER CONNECTOR FOR EXTERNAL LINEAR SCALE TO AVOID BACKLASH**

MAIN FEATURES OF THE 3rd GENERATION

c UL us

- Advanced safety function
- Mode of Operation: Homing Mode, Profile Velocity Mode, Profile Position Mode, Profile Torque Mode, Cycle Sync Position Mode, Cycle Sync Velocity Mode, Cycle Sync Torque Mode.
- Touch Probe Function.
- Speed frequency response of 2.2 kHz [3.3 times that of previous RS1 model!]
- Safe Torque Off (STO) function - SIL3/IEC61508. Performance Level - PL = e/ISO13849-1
- RS3A03A2HAE covers 100W, 200W, 400W, 750W, 1000W, 1500W motors

SAFETY FUNCTIONS SPECIFICATIONS	
STO	SAFE TORQUE OFF
SS1	SAFE STOP 1
SS2	SAFE STOP 2
SOS	SAFE OPERATING STOP
SLS	SAFELY-LIMITED SPEED
SBC	SAFE BRAKE CONTROL
SSM	SAFE SPEED MONITOR

TECHNICAL DATA	EtherCAT Control		
MODEL	RS3A03A2HAE	RS3A05A2HAE	RS3A10A2HAE
MAX CURRENT	30 Amp	50 Amp	100 Amp
MOTOR OUTPUT STAGE	IGBT, PWM control, sinusoidal current		
POWER SUPPLY VOLTAGE	Single-phase or three-phase (configurable by the user) 200 VAC or 230 VAC (+10%, -15%) 50/60 Hz (± 3 Hz)		
LOGIC SUPPLY VOLTAGE	Single-phase from 200 VAC to 230 VAC (+10%, -15%) 50/60 Hz (± 3 Hz)		
DIMENSIONS (mm)	60x160x130	105x160x130	120x205x220
MASS (kg)	1.1	1.65	4.2

SANYO DENKI CO.,Ltd (JAPAN)
R.T.A. s.r.l. PAVIA (ITALY)

SANMOTION AC SERVO SYSTEMS RS3 | 230 VAC | SIL3 SAFE TORQUE OFF (STO) | ADVANCED SAFETY MODULE | EtherCAT®

"RS3A" SERIES AC SERVOAMPLIFIERS:

EtherCAT VERSION OUTLINE DRAWINGS

RS3A03A2HAE

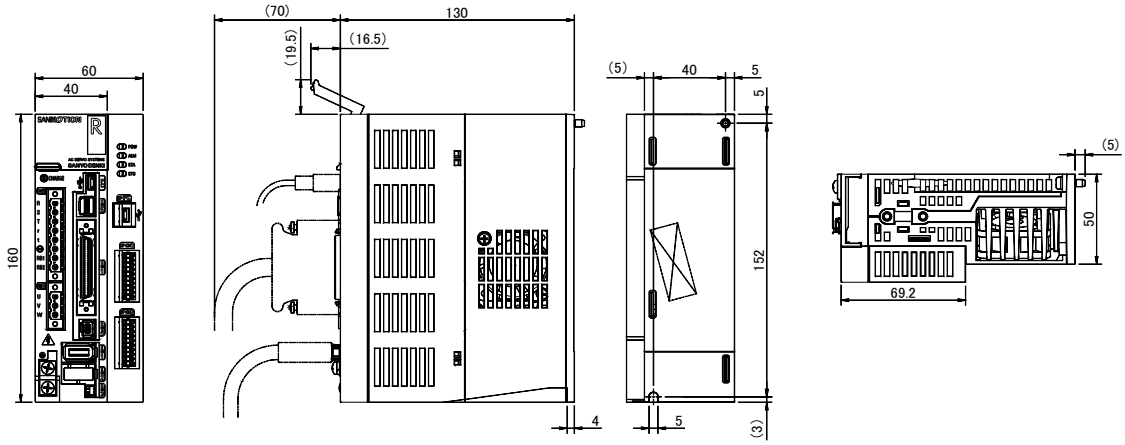

RS3A05A2HAE

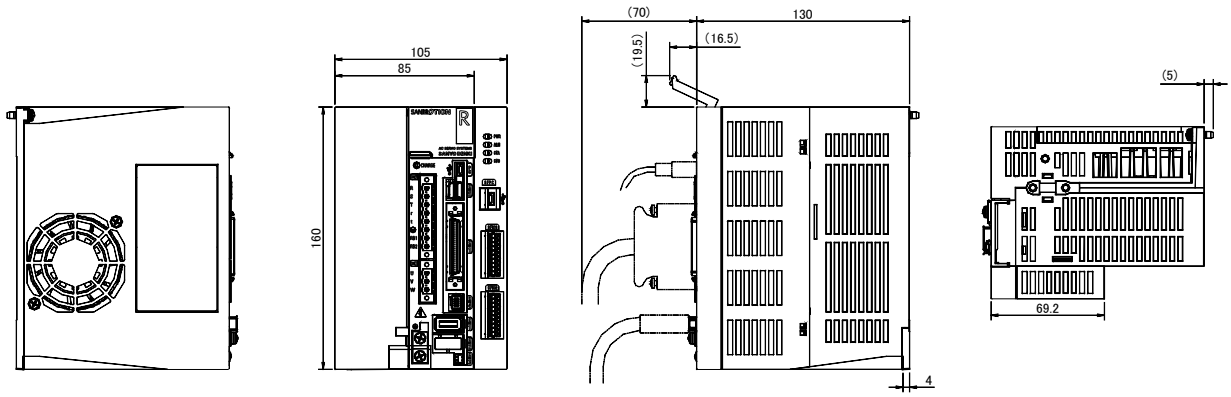

RS3A10A2HAE

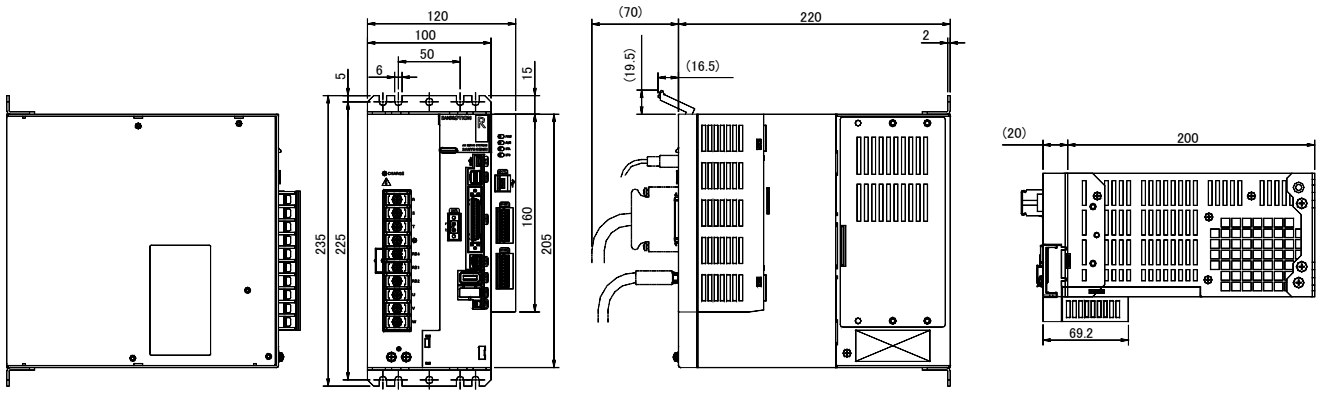

Dimensions mm.

R2AA13200LXR00M (R2AA13200LCR00M)

Dimensions (Unit:mm)

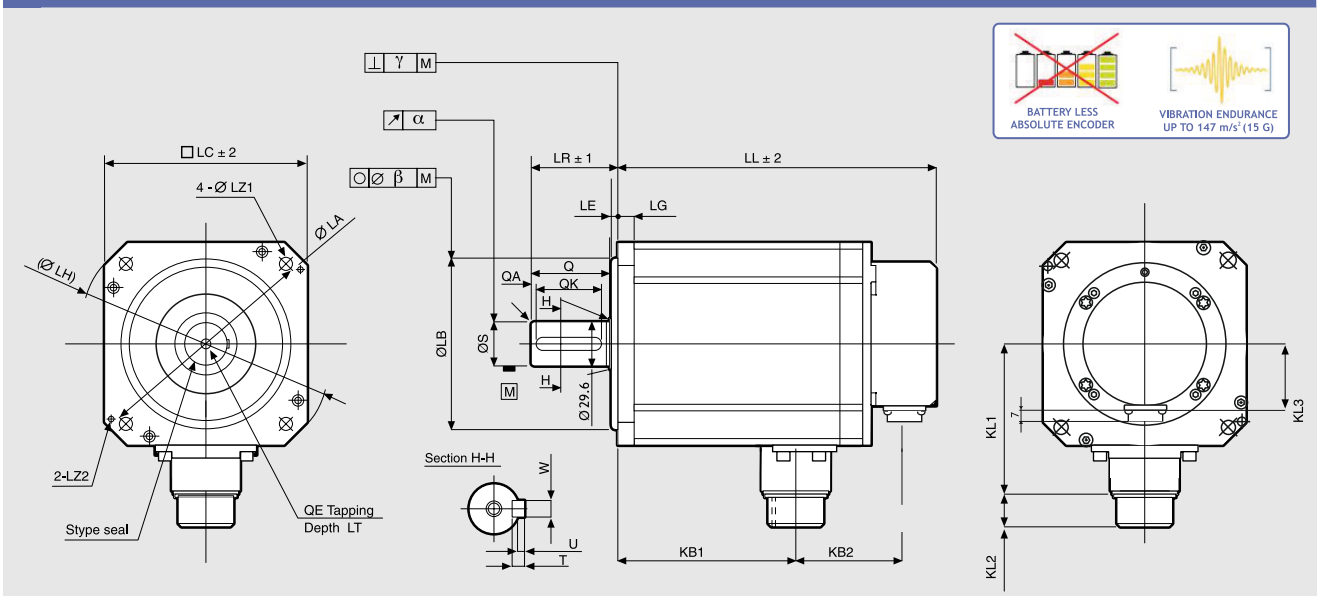

without brake LL	KB2	with brake LL	KB2	KL1	KL2	KL3	LG	LA	LB	LE	LH	LC	LZ1	LZ2	LR	S	Q	QA	QK	W	T	U	KB1	QE	LT
171	57	216	103	98	21	38	12	145	0 110-0.035	4	165	130	9	M6	55	0 28-0.013	50	3	42	0 8-0.036	7	3	99	M8	25

FEATURES

MODEL		R1AA13200LXR00M
NOMINAL POWER	(W)	2000
NOMINAL SPEED	(rpm)	2000
MAXIMUM SPEED	(rpm)	3000
NOMINAL TORQUE	(Nm)	9.5
STALL TORQUE	(Nm)	12
MAXIMUM TORQUE	(Nm)	24
INERTIA	($Kg*m^2$)	12.2×10^{-4}
ENCODER	(imp./rev)	SINGLE TURN: 131072 imp/rev (17 bit) MULTI TURN: 65536 turns (16 bit)
PROTECTION DEGREE		IP65
WEIGHT	[version with brake] (Kg)	10 (12)

TORQUE CURVE
R1AA13200F [2kW] + RS3A10

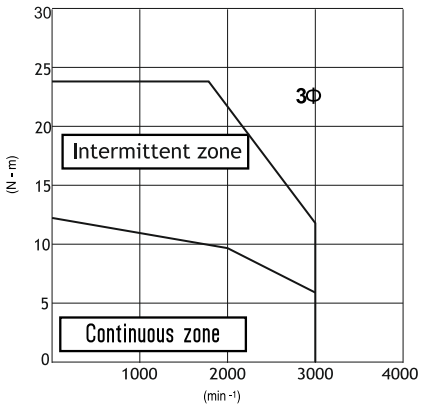

WITHOUT BRAKE
R2AA13200LXR00M



Indicated performances refer to motor controlled by related new RS3 standard and EtherCat amplifiers.

3Φ = torque curve with three-phase power supply

WITHOUT BRAKE
R2AA13200LCR00M



Suggested amplifiers: RS3A05A0AA2, RS3A05A2HA4W00

R.T.A. s.r.l. PAVIA (ITALY) SANYO DENKI CO.,Ltd (JAPAN)

R2CA18350LXR00M (R2CA18350LCR00M)

SANYO DENKI
SANMOTION

Dimensions (Unit:mm)

c UL us

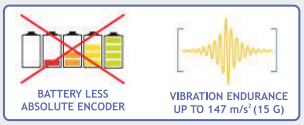

400
VAC

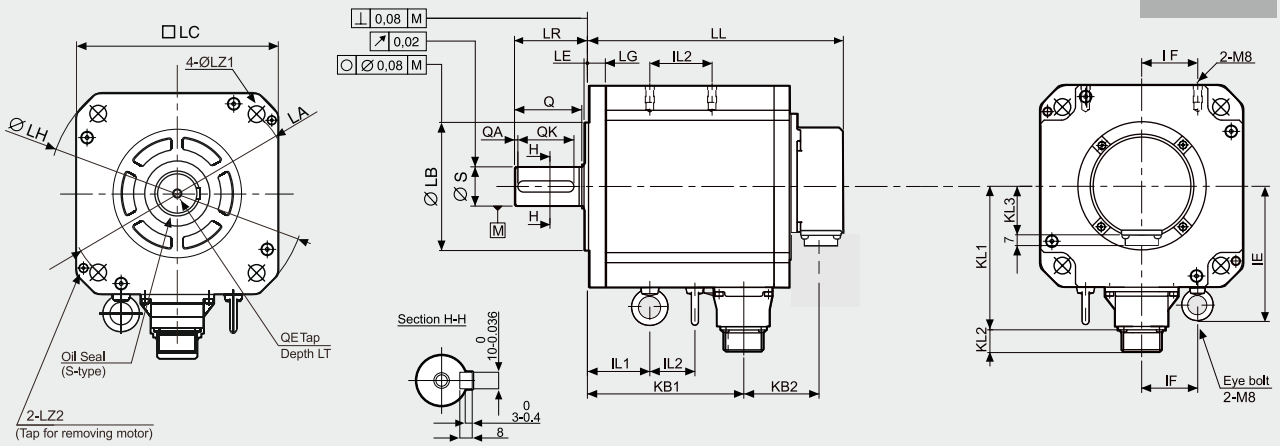

without brake LL	without brake KB2	with brake LL	with brake KB2	KL1	KL2	KL3	LG	LA	LB	LE	LH	LC	LZ1	LZ2	LR	S	Q	QA	QK	IL1	IL2	IF	IE	KB1	QE	LT
159	52	206	99	123	21	38	16	200	0 Ø114.3-0.035	3	Ø230	□180	Ø13.5	M8	65	0 Ø35-0.016	60	3	50	47	20	50	123	92	M8	25

FEATURES

MODEL		R2CA18350LXR00M (R2CA18350LCR00M)
NOMINAL POWER	(W)	3500
NOMINAL SPEED	(rpm)	2000
MAXIMUM SPEED	(rpm)	3000
NOMINAL TORQUE	(Nm)	17.0
STALL TORQUE	(Nm)	22.0
MAXIMUM TORQUE	(Nm)	49.0
INERTIA	($Kg*m^2$)	40×10^{-4}
BATTERY-LESS ABSOLUTE ENCODER	(imp./rev)	SINGLE TURN: 131072 imp/rev (17 bit) MULTI TURN: 65536 turns (16 bit)
PROTECTION DEGREE		IP65
WEIGHT	(Kg)	15.5

TORQUE CURVE

R2CA18350LXH [3.5kW] + RS3C05

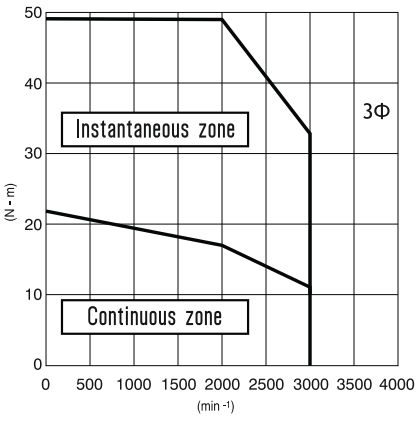

WITHOUT BRAKE



Indicated performances refer to motor controlled by related RS3 standard and EtherCat amplifiers.

3Φ = torque curve with three-phase power supply

WITH BRAKE

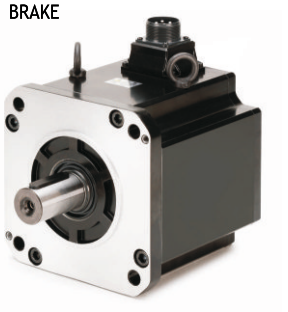

Suggested amplifiers: RS3C05A0AA2, RS3C05A2HA4

R.T.A. s.r.l. PAVIA (ITALY) SANYO DENKI CO.,Ltd (JAPAN)

R2CA18450HXR00M (R2CA18450HCR00M)

SANYO DENKI
SANMOTION

Dimensions (Unit:mm)

BATTERY LESS ABSOLUTE ENCODER

VIBRATION ENDURANCE UP TO 147 m/s² (15 G)

400 VAC

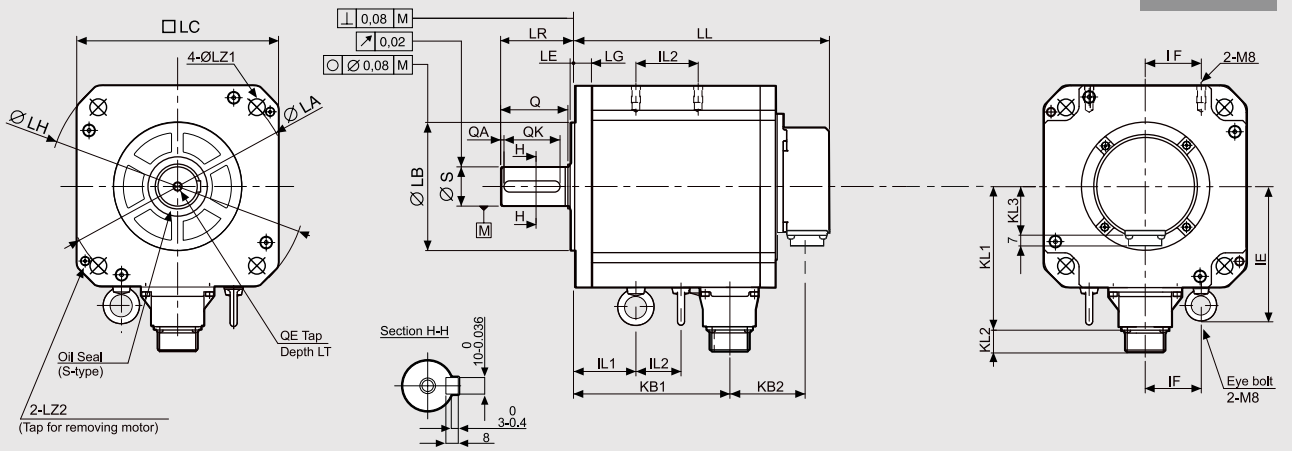

without brake LL	without brake KB2	with brake LL	with brake KB2	KL1	KL2	KL3	LG	LA	LB	LE	LH	LC	LZ1	LZ2	LR	S	Q	QA	QK	IL1	IL2	IF	IE	KB1	QE	LT
176	52	223	99	123	21	38	16	200	0 Ø114.3-0.035	3	Ø230	□180	Ø13.5	M8	65	0 Ø35-0.016	60	3	50	57	20	50	123	109	M8	25

FEATURES

MODEL		R2CA18450HXR00M (R2CA18450HCR00M)
NOMINAL POWER	(W)	4500
NOMINAL SPEED	(rpm)	2000
MAXIMUM SPEED	(rpm)	3500
NOMINAL TORQUE	(Nm)	21.5
STALL TORQUE	(Nm)	30
MAXIMUM TORQUE	(Nm)	75.0
INERTIA	($Kg*m^2$)	50×10^{-4}
BATTERY-LESS ABSOLUTE ENCODER	(imp./rev)	SINGLE TURN: 131072 imp/rev (17 bit) MULTI TURN: 65536 turns (16 bit)
PROTECTION DEGREE		IP65
WEIGHT	(Kg)	20 [24]

TORQUE CURVE

R2CA18450HX [4.5kW] + RS3C10

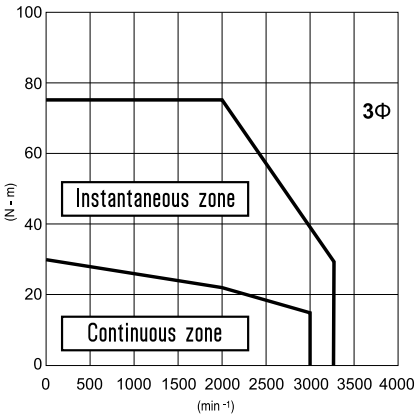

WITHOUT BRAKE



Indicated performances refer to motor controlled by related RS3 standard and EtherCat amplifiers.

3Φ = torque curve with three-phase power supply

WITH BRAKE



Suggested amplifiers: RS3C10A0AA2, RS3C10A2HA4

R.T.A. s.r.l. PAVIA (ITALY) SANYO DENKI CO.,Ltd (JAPAN)

R2CA18750HCR00M

SANYO DENKI
SANMOTION

Dimensions (Unit:mm)

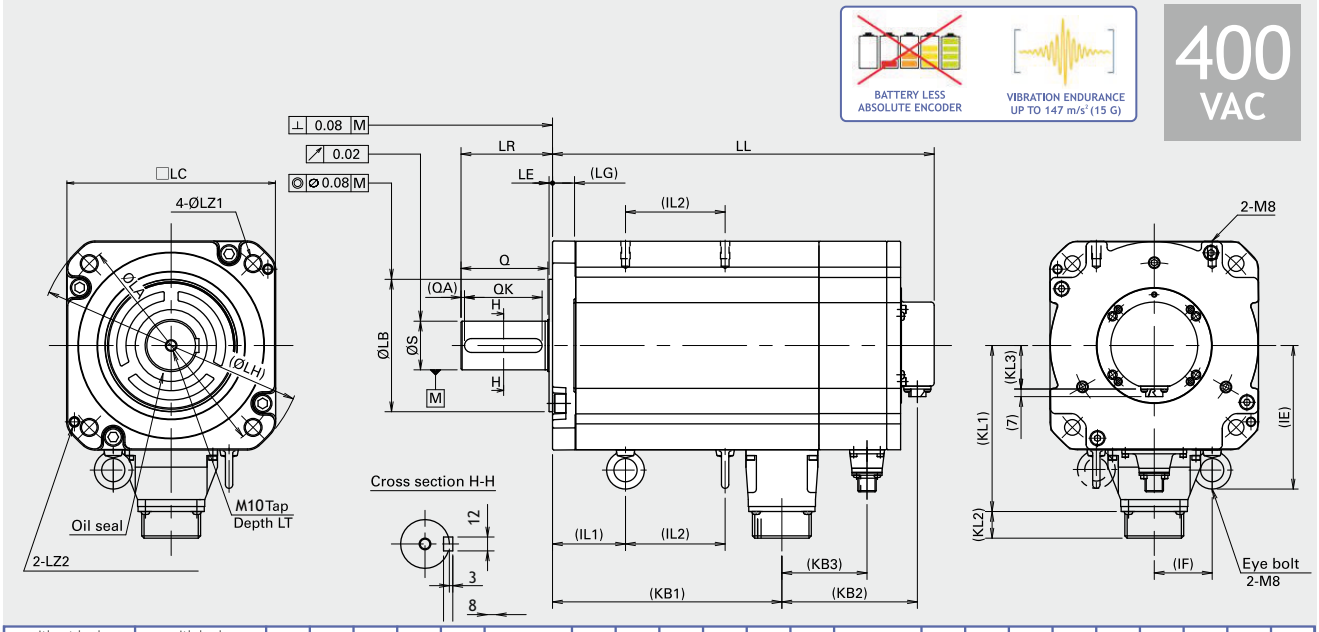

without brake			with brake			LG	KL1	KL2	KL3	LA	LB	LE	LH	LC	LZ1	LZ2	LR	S	Q	QA	QK	KB1	LT	IE	IF	IL1	IL2
LL	KB2	KB3	LL	KB2	KB3																						
--	--	--	329	117	74	19	144	22	38	200	0 -0.0035 114.3	3	230	180	13.5	M8	79	0 -0.016 42	75	3	67	198	25	123	50	63	86

FEATURES

MODEL		R2CA18750HCR00M
NOMINAL POWER	(W)	7500
NOMINAL SPEED	(rpm)	1500
MAXIMUM SPEED	(rpm)	3000
NOMINAL TORQUE	(Nm)	48
STALL TORQUE	(Nm)	54.9
MAXIMUM TORQUE	(Nm)	140
INERTIA	($Kg*m^2$)	98×10^{-4}
BATTERY-LESS ABSOLUTE ENCODER	(imp./rev)	SINGLE TURN: 131072 imp/rev (17 bit) MULTI TURN: 65536 turns (16 bit)
PROTECTION DEGREE		IP65
WEIGHT	(Kg)	38

TORQUE CURVE
R2CA18750HCR [7.5 KW] + RS3C15

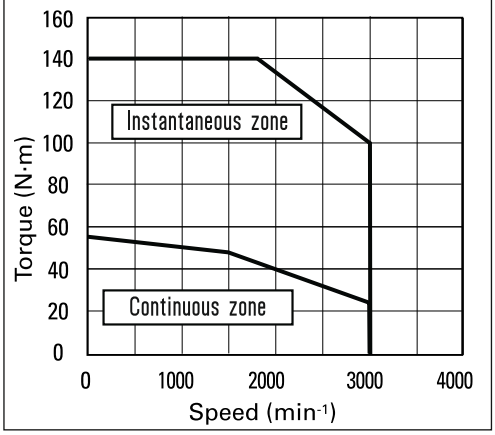

R2CA18750HCR00M

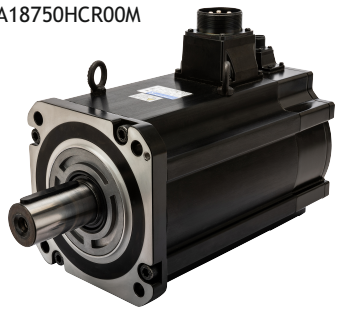

Indicated performances refer to motor controlled by related RS3 standard and EtherCat amplifiers.

3Φ = torque curve with three-phase power supply

Suggested amplifiers: RS3C15A2HL4

R.T.A. s.r.l. PAVIA (ITALY) SANYO DENKI CO.,Ltd (JAPAN)

R2CA2215KVXH00M

SANYO DENKI
SANMOTION

Dimensions (Unit:mm)

400 VAC

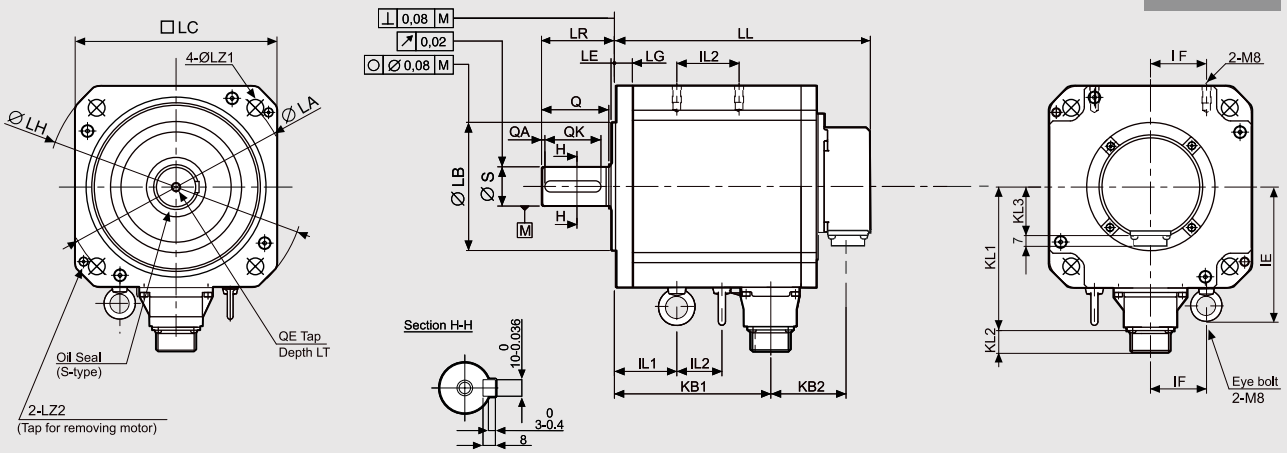

LL	KB2	KL1	KL2	KL3	LG	LA	LB	LE	LH	LC	LZ1	LZ2	LR	S	Q	QA	QK	IL1	IL2	IF	IE	KB1	QE	LT
397	78	162	22	38	19	235	0 Ø200-0.046	4	Ø270	□220	Ø13.5	M10	79	0 Ø55-0.019	79	3	67	98	150	60	142	304	M10	25

FEATURES

MODEL		R2CA2215KVXH00M
NOMINAL POWER	(W)	15000
NOMINAL SPEED	(rpm)	1500
MAXIMUM SPEED	(rpm)	2500
NOMINAL TORQUE	(Nm)	95.0
STALL TORQUE	(Nm)	95.0
MAXIMUM TORQUE	(Nm)	215
INERTIA	($Kg*m^2$)	288×10^{-4}
ENCODER	(imp./rev)	131072 (17BIT)
PROTECTION DEGREE		IP67
WEIGHT	(Kg)	74

TORQUE CURVE

R2CA2215KVXH [15.0kW] + RS3C15

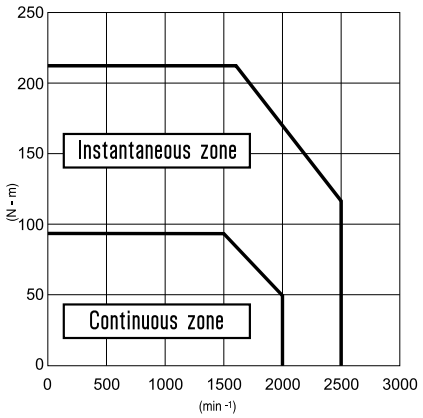

WITHOUT BRAKE



(Version with brake available on request)

Indicated performances refer to motor controlled by related RS3 standard amplifiers.

Suggested amplifiers: RS3C15A0AL2

R.T.A. s.r.l. PAVIA (ITALY) SANYO DENKI CO.,Ltd (JAPAN)

GAM1AA150F0XRB3

Dimensions (Unit:mm)

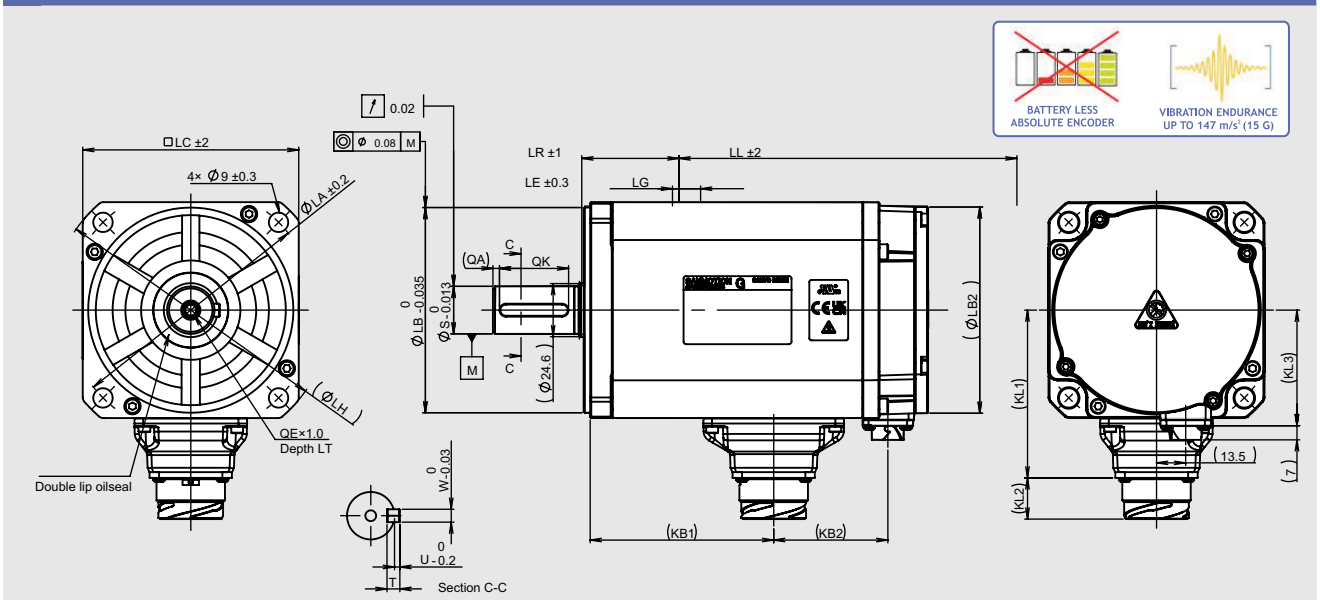

without brake LL	without brake KB2	with brake LL	with brake KB2	KL1	KL2	KL3	LG	LA	LB	LE	LH	LC	LZ1	LB2	LR	S	QA	QK	W	T	U	KB1	QE	LT
161	53	205.5	90	78	19	54	10	115	0 95.5-0.035	3	130	100	9	95.5	45	0 22-0.013	3	32	0 6-0.03	6	2.5	85	M6	20

MODEL		GAM1AA150F0XRB3
NOMINAL POWER	(W)	1500
NOMINAL SPEED	(rpm)	3000
MAXIMUM SPEED	(rpm)	6000
NOMINAL TORQUE	(Nm)	4.8
STALL TORQUE	(Nm)	4.9
MAXIMUM TORQUE	(Nm)	15.0
INERTIA	($Kg*m^2$)	$1.98x10^{-4}$
ENCODER	(imp./rev)	SINGLE TURN: 131072 imp/rev (17 bit) MULTI TURN: 65536 turns (16 bit)
PROTECTION DEGREE		IP67
WEIGHT	(Kg)	5.0

TORQUE CURVE
GAM1AA150F0XRB3 + RS3A05

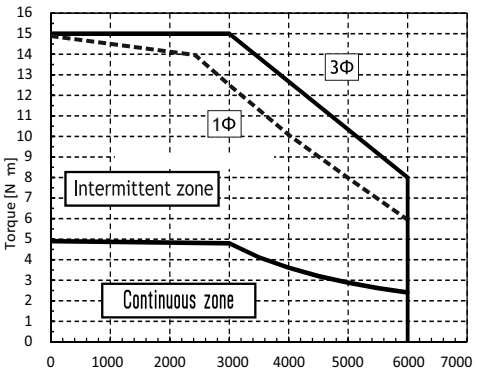

GAM1AA150F0XRB3

Indicated performances refer to motor controlled by related new RS3 standard and EtherCat amplifiers.

1Φ torque curve with single phase power supply
3Φ = torque curve with three-phase power supply

Suggested amplifiers: RS3A05A2HA4W00, RS3A05A0AA2, RS3A05A2HAE

R.T.A. s.r.l. PAVIA (ITALY) SANYO DENKI CO.,Ltd (JAPAN)

GAM2A4010F0XRK2 [GAM2A4010F0CRK2]

SANYO DENKI
SANMOTION

Dimensions (Unit:mm)

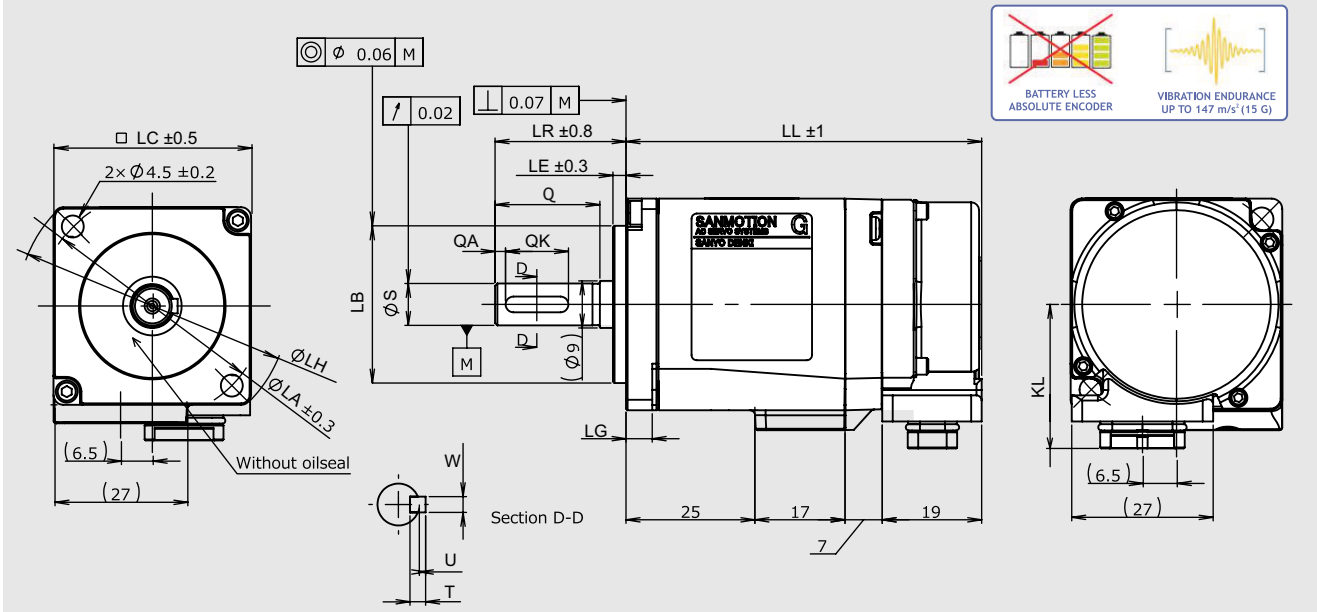

without brake LL	with brake LL	LG	KL	LA	LB	LE	LH	LC	LZ	LR	S	Q	QA	QK	W	T	U	QE	LT
68	100.5	5	27.6	46	0 30-0.021	2.5	56	40	2-Ø4.5	25	0 8-0.009	20	2	12	3	3	1.2	--	--

FEATURES

MODEL		GAM2A4010F0XRK2
NOMINAL POWER [version with brake]	(W)	100
NOMINAL SPEED	(rpm)	3000
MAXIMUM SPEED	(rpm)	6500
NOMINAL TORQUE	(Nm)	0.318
STALL TORQUE	(Nm)	0.318
MAXIMUM TORQUE	(Nm)	1.18
INERTIA	($Kg*m^2$)	0.0600×10^{-4}
BATTERY LESS ABSOLUTE ENCODER		SINGLE TURN: (23 bit) MULTI TURN: 65536 turns
PROTECTION DEGREE		IP67*
WEIGHT [version with brake]	(Kg)	0.39

* Protection degree IP67 (except for the shaft hole and the edge of the cable).

TORQUE CURVE
GAM2A4010F0XRK2 + GAD amplifier

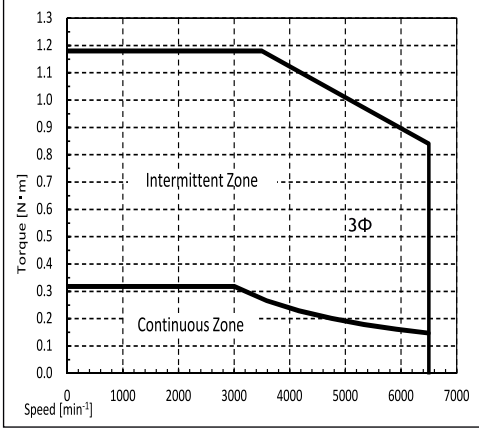

WITHOUT BRAKE
GAM2A4010F0XRK2

Indicated performances refer to motor controlled by related new GAD EtherCAT series amplifiers.

3Φ = torque curve with three-phase power supply

WITH BRAKE
GAM2A4010F0CRK2

Suggested amplifiers: GADSA03AH24

R.T.A. s.r.l. PAVIA (ITALY) SANYO DENKI CO.,Ltd (JAPAN)

GAM2A6020F0XRK2 [GAM2A6020F0CRK2]

SANYO DENKI
SANMOTION

Dimensions (Unit:mm)

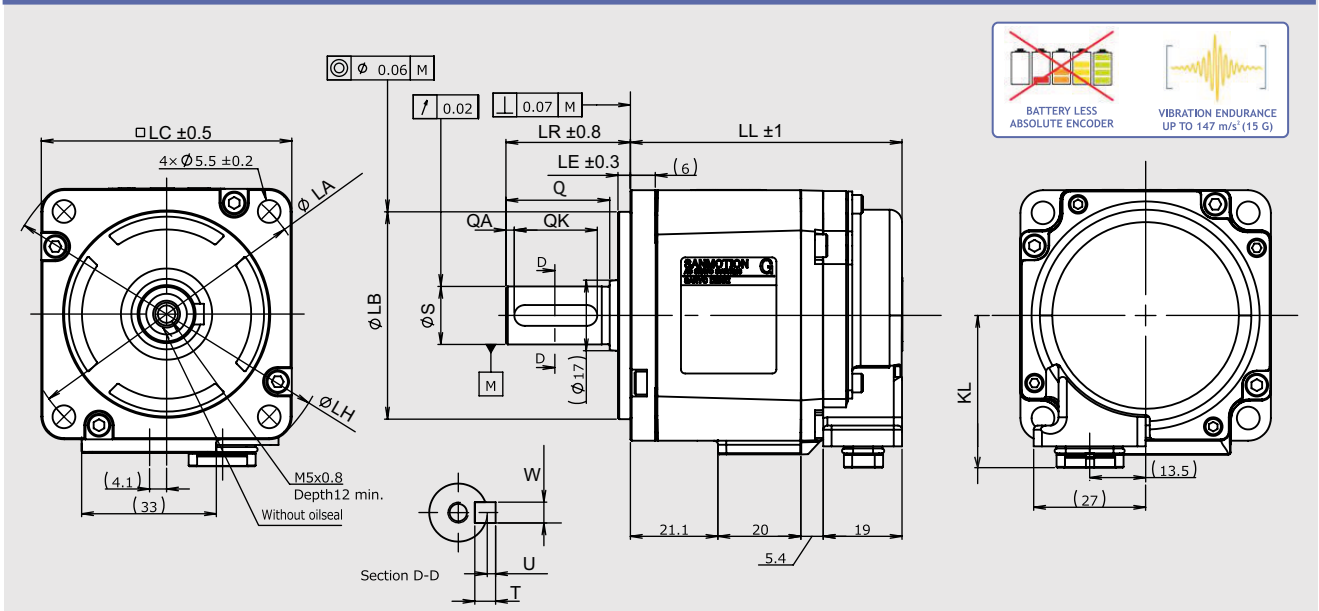

without brake LL	with brake LL	LG	KL	LA	LB	LE	LH	LC	LZ	LR	S	Q	QA	QK	W	T	U	QE	LT
65.5	91.5	6	36.8	70	0 50-0.025	3.0	81	60	--	30	0 14-0.011	25	2	20	5	5	2	--	--

FEATURES

MODEL		GAM2A6020F0XRK2
NOMINAL POWER	(W)	200
NOMINAL SPEED	(rpm)	3000
MAXIMUM SPEED	(rpm)	6500
NOMINAL TORQUE	(Nm)	0.637
STALL TORQUE	(Nm)	0.686
MAXIMUM TORQUE	(Nm)	2.20
INERTIA	($Kg*m^2$)	0.247×10^{-4}
BATTERY LESS ABSOLUTE ENCODER		SINGLE TURN: (23 bit) MULTI TURN: 65536 turns
PROTECTION DEGREE		IP67*
WEIGHT	(Kg)	0.80

* Protection degree IP67 (except for the shaft hole and the edge of the cable).

TORQUE CURVE
GAM2A6020F0XRK2 + GAD amplifier

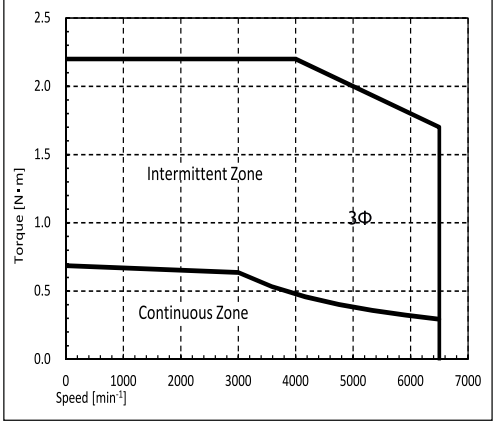

WITHOUT BRAKE
GAM2A6020F0XRK2

Indicated performances refer to motor controlled by related new GAD EtherCAT series amplifiers.

3Φ = torque curve with three-phase power supply

WITH BRAKE
GAM2A6020F0CRK2

Suggested amplifiers: GADSA03AH24

R.T.A. s.r.l. PAVIA (ITALY) SANYO DENKI CO.,Ltd (JAPAN)

GAM2A6040F0XRK2 [GAM2A6040F0CRK2] SANYO DENKI SANMOTION

Dimensions (Unit:mm)

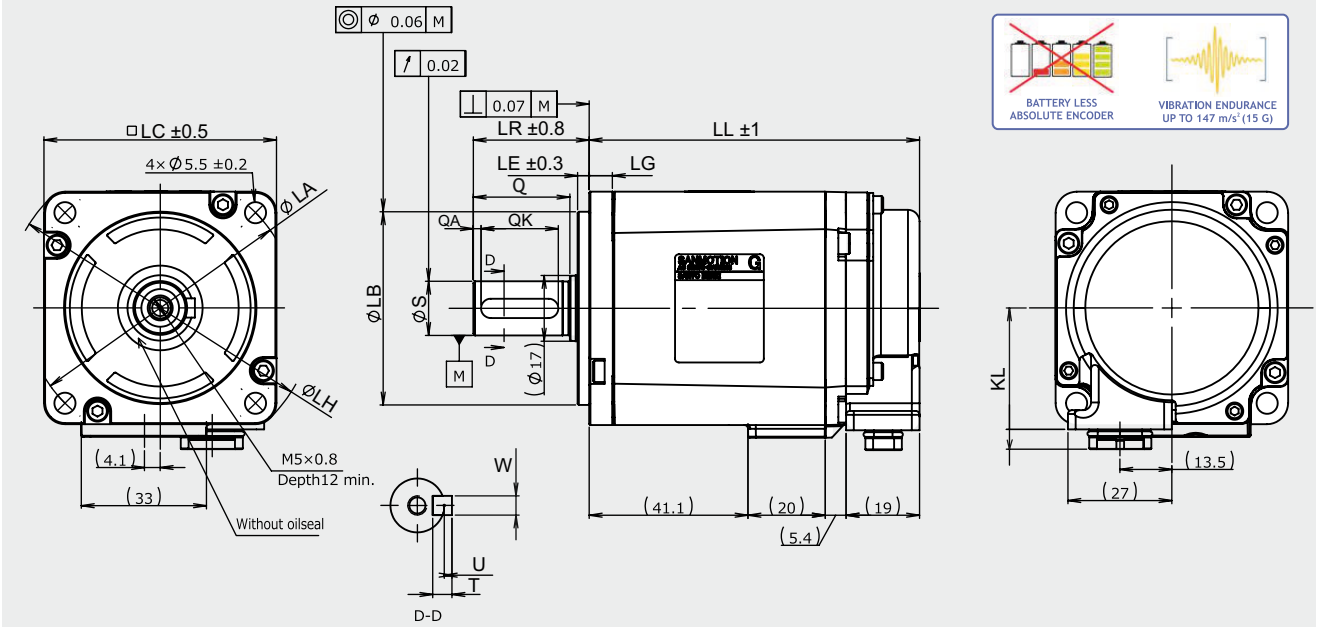

without brake LL	with brake LL	LG	KL	LA	LB	LE	LH	LC	LZ	LR	S	Q	QA	QK	W	T	U	QE	LT
85.5	111.5	6	36.8	70	0 50-0.025	3.0	81	60	--	30	0 14-0.011	25	2	20	5	5	2	--	--

FEATURES

MODEL		GAM2A6040F0XRK2 [GAM2A6040F0CRK2]
NOMINAL POWER	(W)	400
NOMINAL SPEED	(rpm)	3000
MAXIMUM SPEED	(rpm)	6500
NOMINAL TORQUE	(Nm)	1.270
STALL TORQUE	(Nm)	1.370
MAXIMUM TORQUE	(Nm)	4.80
INERTIA	($Kg*m^2$)	0.460×10^{-4} [0.534×10^{-4}]
BATTERY LESS ABSOLUTE ENCODER		SINGLE TURN: (23 bit) MULTI TURN: 65536 turns
PROTECTION DEGREE		IP67*
WEIGHT [version with brake]	(Kg)	1.2 [1.6]

* Protection degree IP67 (except for the shaft hole and the edge of the cable).

TORQUE CURVE
GAM2A6040F0XRK2 + GAD amplifier

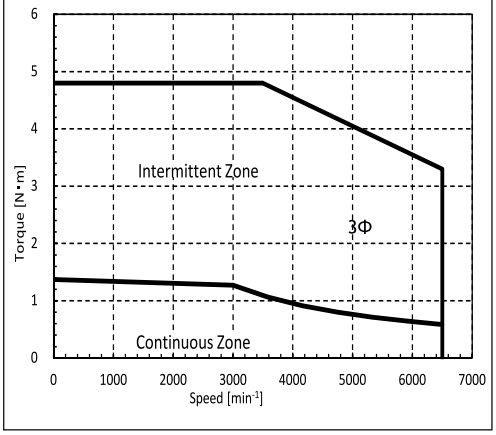

WITHOUT BRAKE
GAM2A6040F0XRK2

Indicated performances refer to motor controlled by related new GAD EtherCAT series amplifiers.

3Φ = torque curve with three-phase power supply

WITH BRAKE
GAM2A6040F0CRK2

Suggested amplifiers: GADSA03AH24

R.T.A. s.r.l. PAVIA (ITALY) SANYO DENKI CO.,Ltd (JAPAN)

GAM2A8075F0XRK2 [GAM2A8075F0CRK2] SANYO DENKI SANMOTION

Dimensions (Unit:mm)

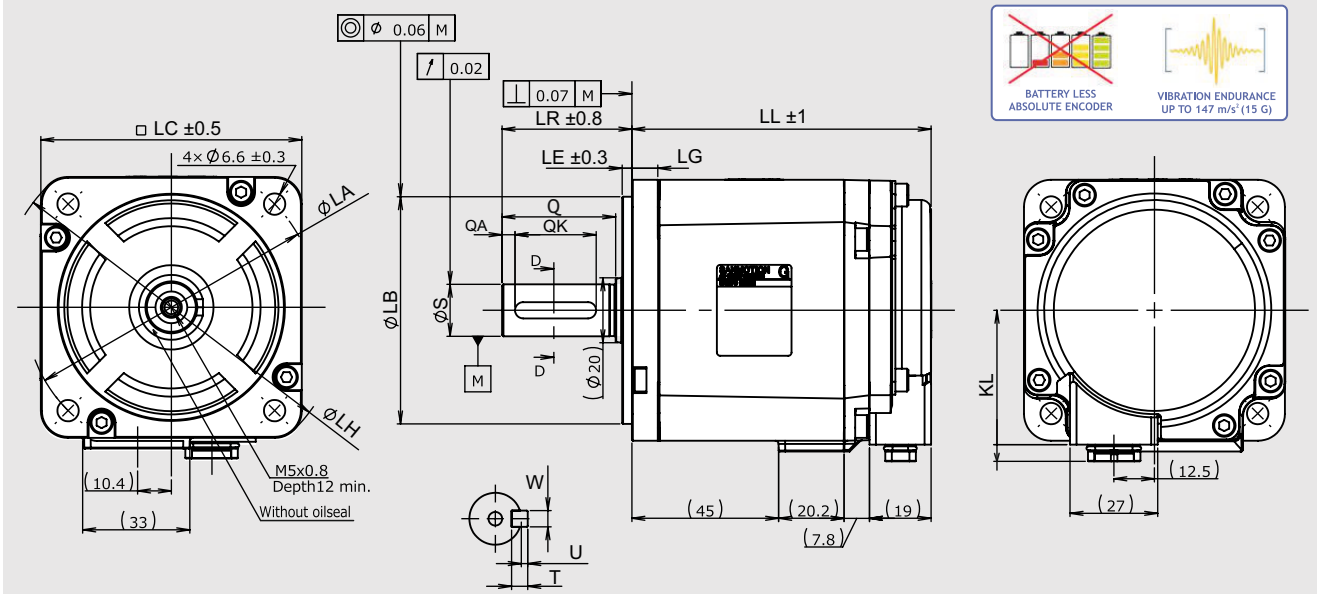

without brake LL	with brake LL	LG	KL	LA	LB	LE	LH	LC	LZ	LR	S	Q	QA	QK	W	T	U	QE	LT
92	126	8	46.6	90	0 70-0.030	3.0	107	80	--	40	0 16-0.011	35	4	25	5	5	2	--	--

FEATURES

MODEL		GAM2A8075F0XRK2 [GAM2A8075F0CRK2]
NOMINAL POWER	(W)	750
NOMINAL SPEED	(rpm)	3000
MAXIMUM SPEED	(rpm)	6500
NOMINAL TORQUE	(Nm)	2.390
STALL TORQUE	(Nm)	2.550
MAXIMUM TORQUE	(Nm)	8.50
INERTIA	($Kg*m^2$)	1.560×10^{-4} [1.760×10^{-4}]
BATTERY LESS ABSOLUTE ENCODER		SINGLE TURN: (23 bit) MULTI TURN: 65536 turns
PROTECTION DEGREE		IP67*
WEIGHT [version with brake]	(Kg)	2.2 [3]

* Protection degree IP67 (except for the shaft hole and the edge of the cable).

TORQUE CURVE
GAM2A8075F0XRK2 + GAD amplifier

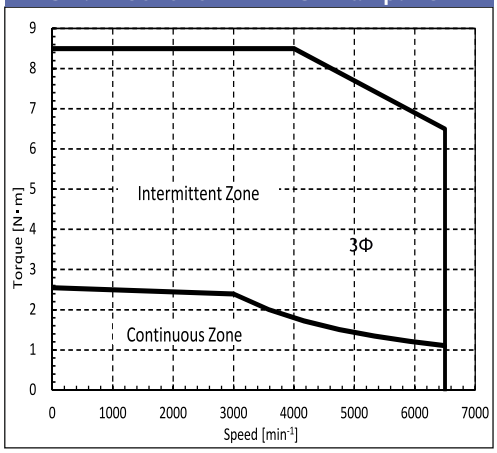

WITHOUT BRAKE
GAM2A8075F0XRK2

Indicated performances refer to motor controlled by related new GAD EtherCAT series amplifiers.

3Φ = torque curve with three-phase power supply

WITH BRAKE
GAM2A8075F0CRK2

Suggested amplifiers: GADSA03AH24

R.T.A. s.r.l. PAVIA (ITALY) SANYO DENKI CO.,Ltd (JAPAN)

GAM2A9100H0XRK2 [GAM2A9100H0CRK3] SANYO DENKI SANMOTION

Dimensions (Unit:mm)

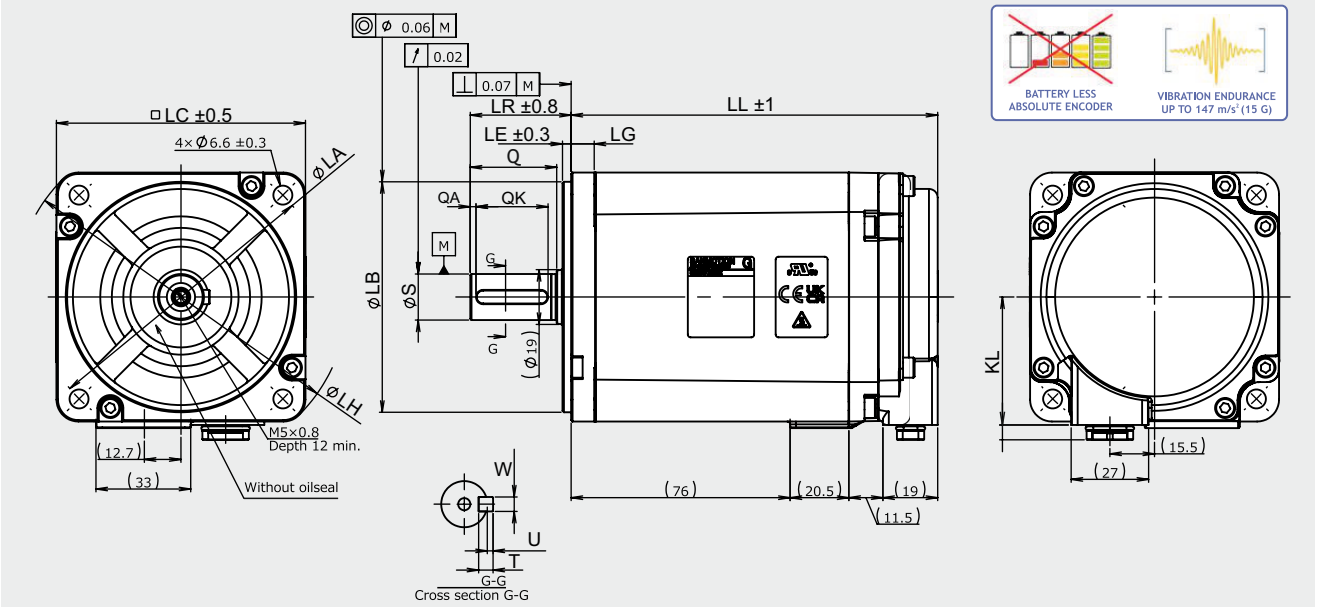

without brake LL	with brake LL	LG	KL	LA	LB	LE	LH	LC	LZ	LR	S	Q	QA	QK	W	T	U	QE	LT
127	153	8	49.6	100	0 80-0.03	3.0	116	86	--	35	0 16-0.011	30	2	25	5	5	2	--	--

FEATURES

MODEL		GAM2A9100H0XRK2
NOMINAL POWER	(W)	1000
NOMINAL SPEED	(rpm)	3000
MAXIMUM SPEED	(rpm)	3000
NOMINAL TORQUE	(Nm)	3.180
STALL TORQUE	(Nm)	3.920
MAXIMUM TORQUE	(Nm)	11.60
INERTIA	($Kg*m^2$)	2.450×10^{-4}
BATTERY LESS ABSOLUTE ENCODER		SINGLE TURN: (23 bit) MULTI TURN: 65536 turns
PROTECTION DEGREE		IP67*
WEIGHT [version with brake]	(Kg)	3.4

* Protection degree IP67 (except for the shaft hole and the edge of the cable).

TORQUE CURVE
GAM2A9100H0XRK2 + GAD amplifier

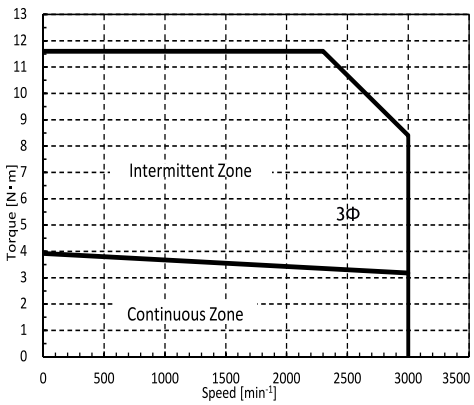

WITHOUT BRAKE
GAM2A9100H0XRK2

Indicated performances refer to motor controlled by related new GAD EtherCAT series amplifiers.

3Φ = torque curve with three-phase power supply

WITH BRAKE
GAM2A9100H0CRK2

Suggested amplifiers: GADSA03AH24

R.T.A. s.r.l. PAVIA (ITALY) SANYO DENKI CO.,Ltd (JAPAN)

GAM2AA150B0XNB3 [GAM2AA150B0CNB3]

Dimensions (Unit:mm)

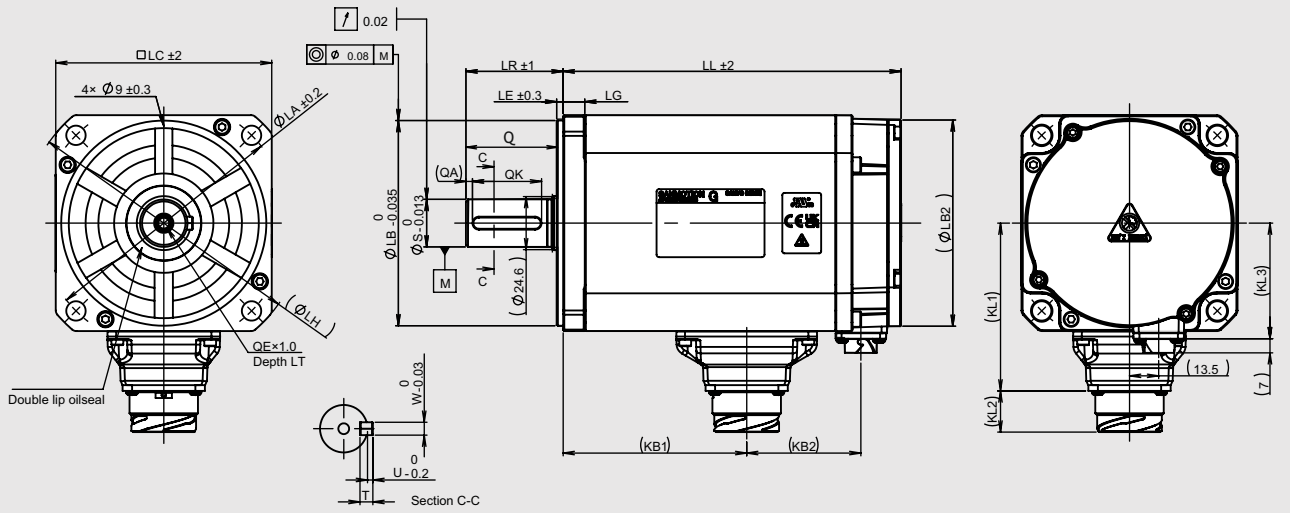

without brake LL	KB2	with brake LL	KB2	KL1	KL2	KL3	LG	LA	LB	LE	LH	LC	LZ1	LB2	LR	S	Q	QA	QK	W	T	U	KB1	QE	LT
161	45	205.5	90	78	19	54	10	115	0 95.5-0.035	3	130	100	9	95.5	45	0 22-0.013	40	3	32	0 6-0.03	6	2.5	97.5	M6	20

MODEL		GAM2AA150B0XNB3 [GAM2AA150B0CNB3]
NOMINAL POWER	(W)	1500
NOMINAL SPEED	(rpm)	2000
MAXIMUM SPEED	(rpm)	2000
NOMINAL TORQUE	(Nm)	7.2
STALL TORQUE	(Nm)	7.7
MAXIMUM TORQUE	(Nm)	20.5
INERTIA	($Kg*m^2$)	$6.10x10^{-4}$ [$6.45x10^{-4}$]
ENCODER	(imp./rev)	SINGLE TURN: 131072 imp/rev (17 bit) MULTI TURN: 65536 turns (16 bit)
PROTECTION DEGREE		IP67
WEIGHT	[version with brake] (Kg)	5.9 [7.5]

TORQUE CURVE
GAM2AA10150B0X[C] + RS3A03

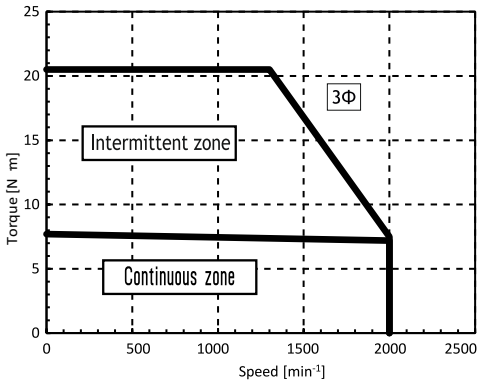

WITHOUT BRAKE
GAM2AA10150B0XNB3

Indicated performances refer to motor controlled by related new RS3 standard and EtherCat amplifiers.

1Φ torque curve with single phase power supply
3Φ = torque curve with three-phase power supply

WITH BRAKE
GAM2AA10150B0CNB3

Suggested amplifiers: RS3A03A2HA4W00, RS3A03A0AA2, RS3A03A2HAE

R.T.A. s.r.l. PAVIA (ITALY) SANYO DENKI CO.,Ltd (JAPAN)

GAM2AA150B0XRB3 [GAM2AA150B0CRB3]

Dimensions (Unit:mm)

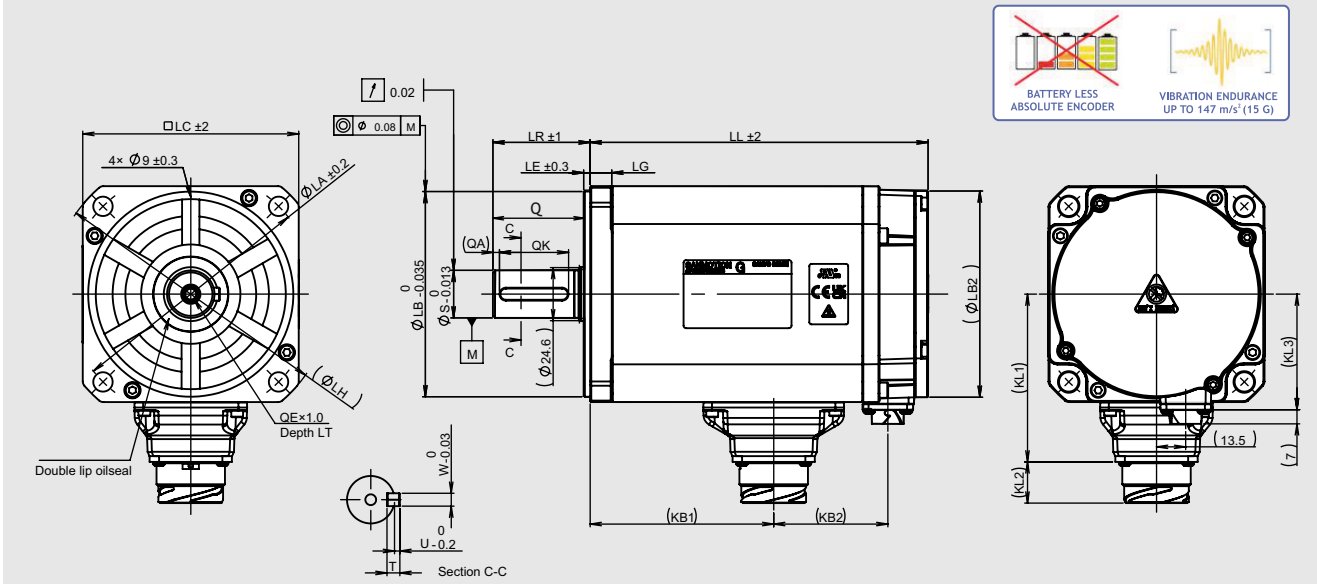

without brake LL	KB2	with brake LL	KB2	KL1	KL2	KL3	LG	LA	LB	LE	LH	LC	LZ1	LB2	LR	S	Q	QA	QK	W	T	U	KB1	QE	LT
161	45	205.5	90	78	19	54	10	115	0 95.5-0.035	3	130	100	9	95.5	45	0 22-0.013	40	3	32	0 6-0.03	6	2.5	97.5	M6	20

MODEL		GAM2AA150B0XRB3 [GAM2AA150B0CRB3]
NOMINAL POWER	(W)	1500
NOMINAL SPEED	(rpm)	2000
MAXIMUM SPEED	(rpm)	2000
NOMINAL TORQUE	(Nm)	7.2
STALL TORQUE	(Nm)	7.7
MAXIMUM TORQUE	(Nm)	20.5
INERTIA	($Kg*m^2$)	$6.10x10^{-4}$ [$6.45x10^{-4}$]
ENCODER	(imp./rev)	SINGLE TURN: 131072 imp/rev (17 bit) MULTI TURN: 65536 turns (16 bit)
PROTECTION DEGREE		IP67
WEIGHT	[version with brake] (Kg)	5.9 [7.5]

TORQUE CURVE
GAM2AA10150B0X[C] + RS3A03

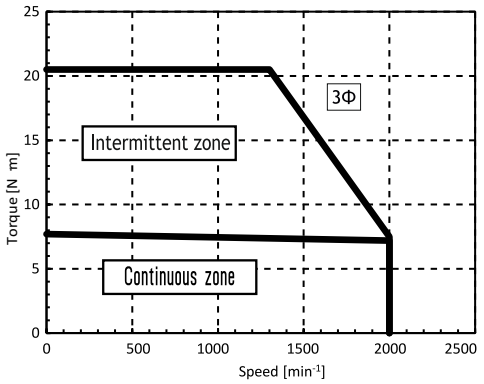

WITHOUT BRAKE
GAM2AA150B0XRB3

Indicated performances refer to motor controlled by related new RS3 standard and EtherCat amplifiers.

1Φ torque curve with single phase power supply
3Φ = torque curve with three-phase power supply

WITH BRAKE
GAM2AA150B0CRB3

Suggested amplifiers: RS3A03A2HA4W00, RS3A03A0AA2, RS3A03A2HAE

R.T.A. s.r.l. PAVIA (ITALY) SANYO DENKI CO.,Ltd (JAPAN)



PLANETARY GEARBOXES

SG-P11-120-025-15-SM-286X-00000



PLANETARY GEARBOXES

SG 120

i=025

φ=15'

MADE IN ITALY

IP64

Dimensions (Units:mm)

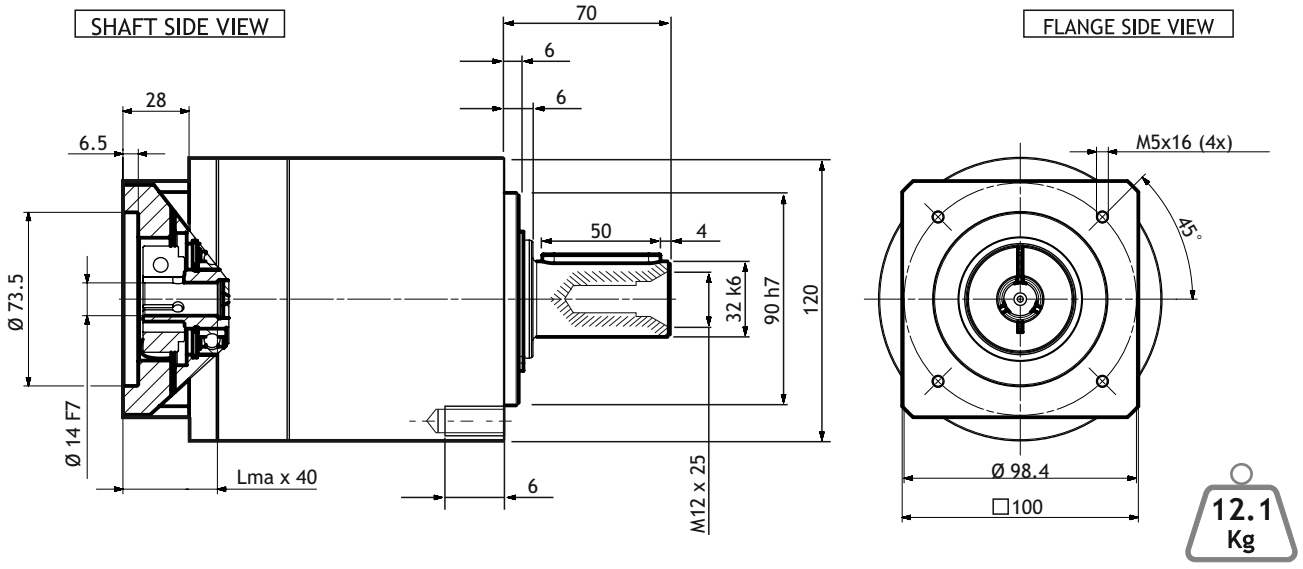

MODEL	Rated output torque [Nm]	Maximum acceleration output torque [Nm]	Emergency step output torque [Nm]	Backlash [arcmin]	Nominal input speed [min^{-1}]	Maximum momentary input speed [min^{-1}]	Torsional stiffness [Nm/arcmin]	Maximum radial force applying on output shaft [N]	Maximum axial force applying on output shaft [N]	Gear efficiency [%]	Gear moment of inertia [Kgcm^2]
SG-P11-120-025-15-SM-286X-00000	110	190	360	15‘	3000	4500	22.5	3500	3000	94	0.71

Suggested motors

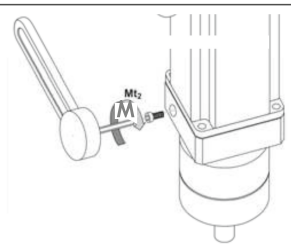

RM 3RxM



RM 3TxM-0xx0

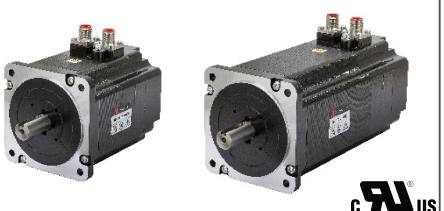

MOUNTING OPERATION MODE: ■ Tightening torque M=11 Nm ■ Locking bolt M6 ■ R.T.A. Quality Control

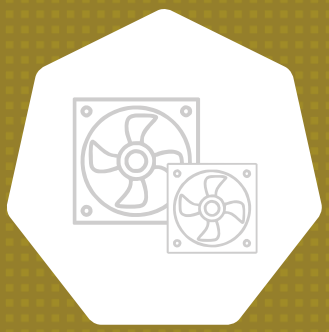

COOLING FANS

9G1224H102

120x120x38 mm

24 V

General Specifications

- Material:
  - Frame: Plastics (Flammability: UL 94V-0)
  - Impeller: Plastics (Flammability: UL 94V-1)
- Expected Life: 40,000 h (L10:Survival rate: 90% at 60°C, rated voltage, and continuously run in a free air state)
- Lead Wire: ⊕ red ⊖ black or blue
- Storage Temperature: -30°C to +70°C (Non-condensing)
- Ball bearings
- International Standards: UL/CSA, TÜV, RoHS

Air Flow - Static Pressure Characteristics

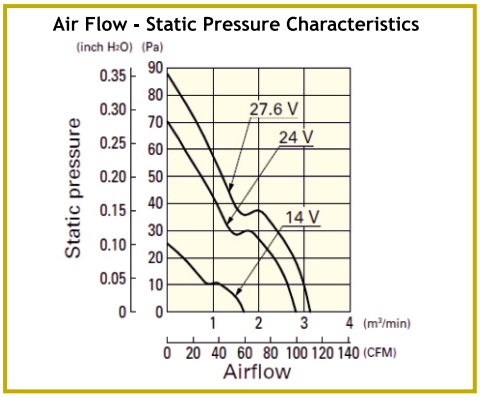

Specifications

Model No.	Rated Voltage [V]	Operating Voltage Range [V]	Rated Current [A]	Rated Input [W]	Rated Speed [min⁻¹]	Max. Air Flow [m³/min]	[CFM]	Max. Static Pressure [Pa]	[inchH2O]	SPL [dB(A)]	Operating Temperature [°C]	Expected Life [h]
9G1224H102	24	14.0 to 27.6	0.22	5.28	2,600	2.8	99	70.4	0.283	39	-20 to +70	40,000/60°

Dimensions (Unit:mm)

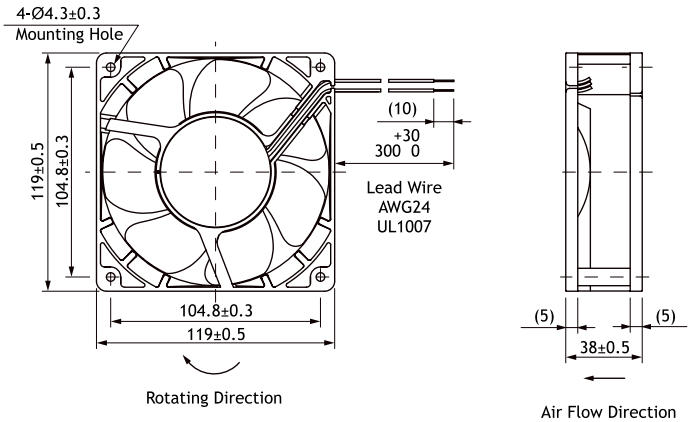

Reference dimension of mounting holes and vent opening (Unit: mm)

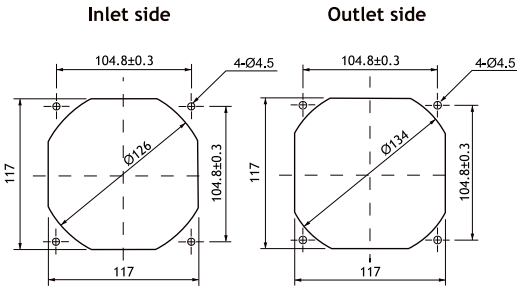

120 mm sq.



- Model always available on stock at R.T.A.
- Also available for online purchasing at www.rta-store.com

ITALY

Corporate Headquarter

R.T.A. srl
Via E. Mattei 15, Fraz. Divisa - 27020 MARCIGNAGO (PV) ITALY
T +39.0382.929.855 | F +39.0382.929.150 | info@rta.it
www.rta.it

Local Branches

R.T.A. Filiale Centro
Centro Direzionale Cavour
Via Cavour 2, 40055 Villanova di Castenaso (BO) ITALY
T +39.051.780141 | rtabo@rta.it

GERMANY

R.T.A. Deutschland GmbH
Bublitzer Strasse 34, 40599 Düsseldorf GERMANY
T +49.211.749.668.60 | F +49.211.749.668.66 | info@rta-deutschland.de
www.rta-deutschland.de

INDIA

R.T.A. INDIA Pvt LTD
SCMC House, 16/6, 3rd Floor
Vishal Nagar Road - Pimple Nilakh
Pune 411 027 - Maharashtra INDIA
T +91 9422507445 | info@rta-india.in
www.rta-india.in

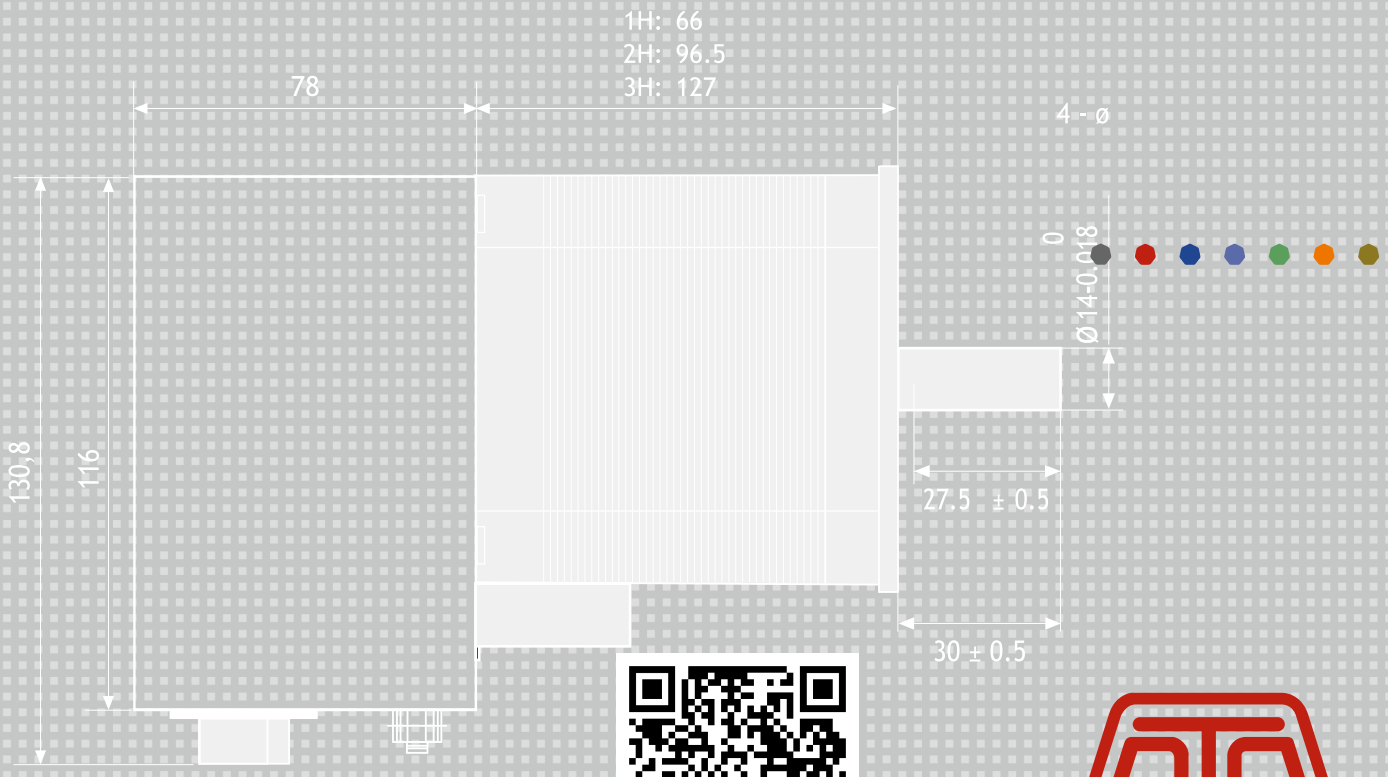

NEWS_EN_OCT_25

GENERAL CATALOGUE

Look Ahead!