EM 2H2M-0XX0

Dimensions (Unit:mm)

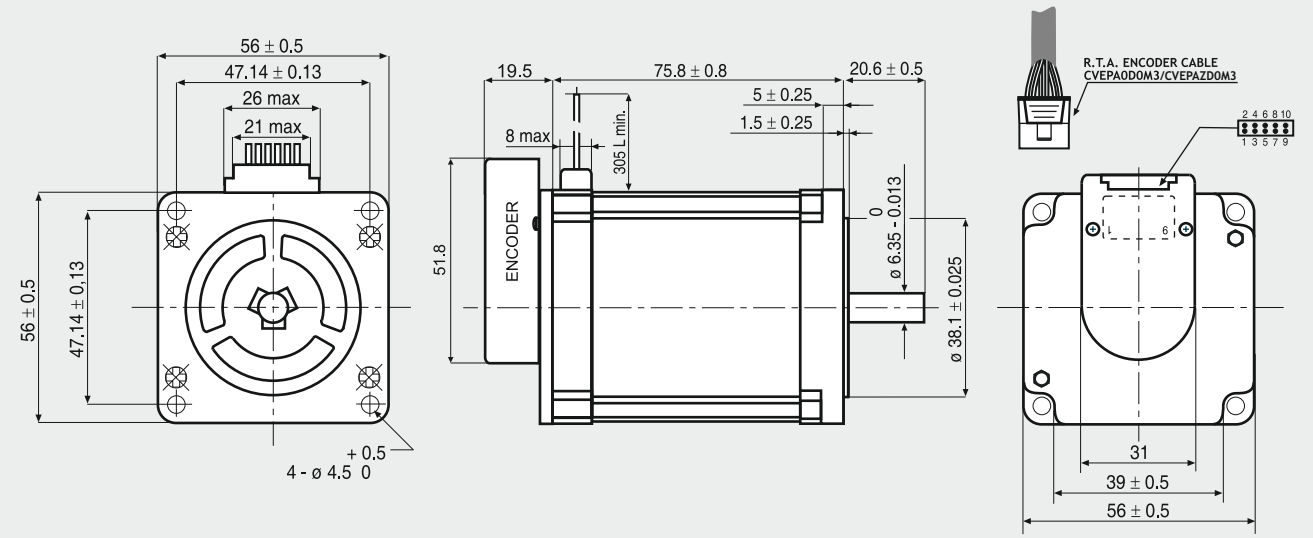

SANYO DENKI MOTOR FEATURES

MODEL		EM 2H2M-OXXO
SANYO DENKI MOTOR CODE		103-H7126-1710
BASIC STEP ANGLE		1.8° ± 0.09°
BIPOLAR PARALLEL CURRENT	(A)	4.0
RESISTANCE	(Ohm)	0.48
INDUCTANCE	(mH)	2.2
BIPOLAR HOLDING TORQUE	(Ncm)	165
ROTOR INERTIA	($Kgm^2 \times 10^{-7}$)	360
THEORETICAL ACCELERATION	(rad × $sec.^{-2}$)	45800
BACK E.M.F.	(V/Krpm)	31
MASS	(Kg)	1.0
LEADS CODE		V

TORQUE/SPEED CURVE

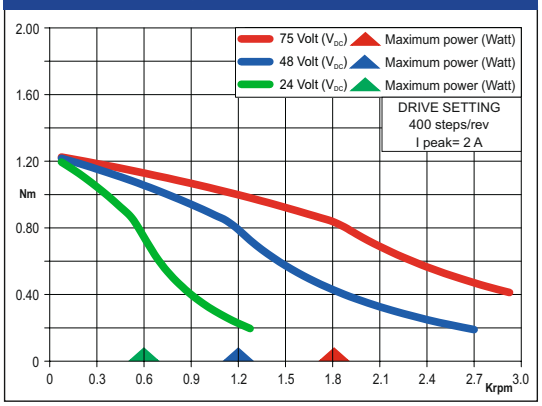

ENCODER OPTIONS:		EM 2H2M-04D0	EM 2H2M-04E0	EM 2H2M-0HE0
RESOLUTION		400 cpr	400 cpr	4000 cpr
INDEX		No	Yes	Yes
CURRENT CONSUMPTION	(mA)	50	50	85
HIGH LEVEL OUTPUT	(Volt)	5 (TIP) - 4.75 (MIN) (I_{MAX}=25mA)	3.4 (TIP) - 2.4 (MIN) (I_{MAX}=20mA)	3.4 (TIP) - 2.4 (MIN) (I_{MAX}=20mA)
LOW LEVEL OUTPUT	(Volt)	0.25 (TIP) - 0.6 (MAX) (I_{MAX}=25mA)	0.2 (TIP) - 0.4 (MAX) (I_{MAX}=20mA)	0.2 (TIP) - 0.4 (MAX) (I_{MAX}=20mA)
OUTPUT SIGNAL		Differential	Differential	Differential
MAXIMUM FREQUENCY	(KHz)	100	100	720
POWER SUPPLY VOLTAGE	(Volt)	5 V_{DC} ± 10%	5 V_{DC} ± 10%	5 V_{DC} ± 10%

ENCODER NEEDS CVEPA0D0M3 OR CVEPAZD0M3 R.T.A. CABLE. CONTACT R.T.A. FOR FURTHER DETAILS

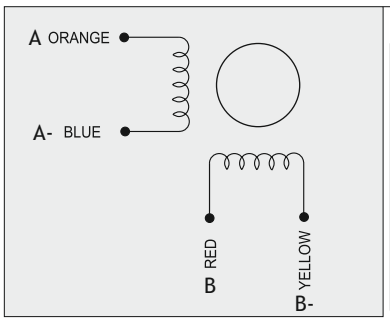

ENCODER PIN-OUT

DESCRIPTION	04D0 PINS	04E0 PINS	0HE0 PINS	R.T.A. CABLE LEADS COLOR
CHANNEL A+	6	6	6	GREEN
CHANNEL A-	5	5	5	PURPLE
CHANNEL B+	8	8	8	BLUE
CHANNEL B-	7	7	7	BROWN
+ DC (5V)	2	2	2	RED
GROUND	3	3	3	BLACK
INDEX+	/	10	10	ORANGE
INDEX-	/	9	9	WHITE

Suggested R.T.A. drive series: BSD, CSD, NDC, ADW, HGD, FLEX-DRIVE

R.T.A. s.r.l.
Via E. Mattei - Fraz- Divisa
27020 Marcignago (PV) (Italy)
T +39.0382.929.855
F +39.0382.929.150
www.rta.it

R.T.A. Deutschland GmbH
Bublitzer Strasse 34, 40599
Duesseldorf (Germany)
T +49.211.749.668.60
F +49.211.749.668.66
www.rta-deutschland.de

R.T.A. IBERICA
C/Generalitat 22, Local 1
08850 Gava - Barcelona (Spain)
T +34 936.388.805
F +34 936.334.595
www.rta-iberica.es

R.T.A. INDIA Pvt
Teerth Business Center 3rd Floor, Unit No. 7,
Block EL-15, MIDC Bhosari Pimpi-Chinchwd,
Pune 411026 (India)
Tel. +91 9422507445
www.rta-india.in

R.T.A. s.r.l. PAVIA (ITALY) SANYO DENKI CO.,Ltd (JAPAN)